WILTON, NEW HAMPSHIRE

LAND USE LAWS

2020 ZONING ORDINANCE

MARCH 1981
REVISED MARCH 1990

Amended March; 1991, 1992, 1993, 1994, 1996, 1997, 1998, 1999, 2000, 2001, 2002, 2003, 2004, 2005, 2006, 2007, 2009, 2010, 2011, 2014, 2015, 2016, 2017, 2018, 2019, 2020

May, 2009 (Floodplain Conservation District –FEMA FIS & FIRM Update) Effective 9/25/09

TABLE OF CONTENTS

1.0 PREAMBLE 1

2.0 DISTRICTS 2

3.0 DEFINITIONS 3

4.0 GENERAL PROVISIONS 7

4.1 ALTERATION AND REMOVAL OF MATERIALS. 7
4.2 SANITARY PROTECTION. 7
4.3 UNREGISTERED MOTOR VEHICLES. 8
4.4 SPECIAL EXCEPTIONS. 8
4.5 VARIANCES. 8
4.6 PERFORMANCE STANDARDS. 9
4.7 TEMPORARY PLACEMENT OF MANUFACTURED HOMES AND OFFICE FACILITIES 9
4.8 PRIVATE AIRCRAFT LANDINGS AND TAKEOFFS 10
4.9 NOTIFICATION OF ABUTTERS 10

5.0 RESIDENTIAL DISTRICT 11

5.1 PERMITTED USES. 11
5.2 LOT REQUIREMENTS. 12
5.3 SPECIAL EXCEPTIONS. 12
5.4 MANUFACTURED HOUSING. 15
5.5 ACCESSORY DWELLING UNITS. 15

6.0 GENERAL RESIDENCE AND AGRICULTURAL DISTRICT 17

6.1 PERMITTED USES. 17
6.2 LOT REQUIREMENTS. 17
6.3 ALTERNATIVE LOT REQUIREMENTS. 17
6.4 CLUSTER DEVELOPMENTS. 18
6.5 MANUFACTURED HOUSING. 19
6.6 SPECIAL EXCEPTIONS. 19

7.0 COMMERCIAL DISTRICT 20

7.1 PERMITTED USES. 20
7.2 LOT REQUIREMENTS. 22

7A.0 DOWNTOWN COMMERCIAL DISTRICT 23

7A.1 DOWNTOWN COMMERCIAL DISTRICT LOCATION. 23
7A.2 GENERAL PROVISIONS. 24
7A.3 PERMITTED USES. 24
7A.4 SITE PLAN REVIEW REQUIRED. 25
7A.5 LOT REQUIREMENTS. 25
7A.6 PROHIBITED USES. 26

8.0 INDUSTRIAL DISTRICT 27

8.1 PERMITTED USES. 28
8.2 LOT REQUIREMENTS. 28
8.3 CONDITIONS FOR USE OF AREA WATER SUPPLY. 29
8.4 TRAFFIC GENERATION. 30
8.5 PROHIBITED USES. 30
8.6 SPECIAL EXCEPTIONS. 30

9.0 OFFICE PARK DISTRICT 31

9.1 DISTRICT LOCATION. 31
9.2 PERMITTED USES. 31
9.3 LOT REQUIREMENTS. 31
9.4 ARCHITECTURAL DESIGN. 32
9.5 OPEN SPACE DESIGN. 32

9A.0 RESEARCH AND OFFICE PARK DISTRICT 33

9A.1 PURPOSE. 33
9A.2 DEFINITIONS. 33
9A.3 DISTRICT LOCATION. 35
9A.4 PERMITTED USES. 35
9A.5 RESEARCH AND OFFICE PARK LOT REQUIREMENTS. 37
9A.6 CONDITIONS FOR USE OF AREA WATER SUPPLY. 38
9A.7 PERFORMANCE STANDARDS. 39
9A.8 PROCEDURES. 39

9B.0 GRAVEL EXCAVATION DISTRICT 42

9B.1 PURPOSE 42
9B.2 DISTRICT LOCATION 42
9B.3 PERMITTED USES 42
9B.4 PROHIBITED USES 42
9B.5 NONCONFORMING USES 42
9B.6 REQUIREMENTS AND PERFORMANCE STANDARDS 43

10.0 FLOODPLAIN CONSERVATION DISTRICT 45

10.1 DEFINITIONS. 45
10.2 PERMIT REQUIRED. 48
10.3 LOCATION OF THE 100-YEAR FLOOD ELEVATION. 49
10.4 CONSTRUCTION STANDARDS. 49
10.5 ALTERATION OF WATER COURSES. 51
10.6 VARIANCES AND APPEALS. 51

11.0 WETLANDS CONSERVATION DISTRICT 53

11.1 PURPOSE. 53
11.2 DISTRICT BOUNDARIES. 53
11.3 PERMITTED USES. 53
11.4 SPECIAL EXCEPTIONS. 54
11.5 INCORRECTLY DESIGNATED ZONES. 54
11.6 (DELETED MARCH 2020) 54

12.0 AQUIFER PROTECTION DISTRICT 55

12.1 PURPOSE. 55
12.2 DISTRICT LOCATION. 55
12.3 PERMITTED USES. 57
12.4 PROHIBITED USES. 58
12.5 PERFORMANCE STANDARDS. 59
12.6 INCORRECTLY DESIGNATED ZONES. 60
12.7 NON-CONFORMING USES. 60

13.0 AGE-RESTRICTED HOUSING DISTRICT 61

13.1 PURPOSE. 61
13.2 DISTRICT LOCATION. 61
13.3 GENERAL STANDARDS. 61
13.4 REVIEW OF SITE PLANS. 63
13.5 CHANGE OF USE. 63

14.0 WATERSHED DISTRICT 64

14.1 PURPOSE. 64
14.2 DISTRICT BOUNDARY. 64
14.3 LOT REQUIREMENTS. 64
14.4 PROHIBITED USES. 65
14.5 CLUSTER DEVELOPMENT. 65
14.6 PREVIOUS REGULATIONS. 65
14.7 SPECIAL EXCEPTIONS. 65

15.0 PERSONAL WIRELESS SERVICE FACILITIES 66

15.1 DISTRICT REGULATIONS. 68
15.2 USE REGULATIONS. 69
15.3 DIMENSIONAL REQUIREMENTS. 70
15.4 PERFORMANCE AND DESIGN STANDARDS. 71
15.5 MONITORING AND MAINTENANCE. 74
15.6 ABANDONMENT OR DISCONTINUATION OF USE. 75

15A.0 SMALL WIND ENERGY SYSTEMS 76

15A.1 PURPOSE. 76
15A.2 DEFINITIONS. 76
15A.3 LOCATION 77
15A.4 STANDARDS. 77
15A.5 SITE PLAN REVIEW. 78
15A.6 ABANDONMENT OR DISCONTINUATION OF USE. 80
15A.7 VIOLATION. 80
15A.8 PENALTIES. 81

15B.0 SOLAR COLLECTION SYSTEMS 82

15B.1 AUTHORITY AND PURPOSE 82
15B.2 DEFINITIONS 82
15B.3 TABLE OF PERMITTED USES. 83
15B.4 GENERAL REQUIREMENTS AND EXEMPTIONS. 84
15B.5 SITE PLAN REVIEW. 85
15B.6 STORMWATER REQUIREMENTS FOR GROUND MOUNTED SOLAR COLLECTION SYSTEMS. . 86
15B.7 ABANDONMENT AND DECOMMISSIONING. 86

16.0 SIGNS 88

16.1 GENERAL PROVISIONS. 88
16.2 RESIDENTIAL DISTRICT AND GENERAL RESIDENCE AND AGRICULTURAL DISTRICT. 89
16.3 COMMERCIAL AND INDUSTRIAL DISTRICT. 89
16.4 OFFICE PARK DISTRICT. 90
16.5 DOWNTOWN COMMERCIAL DISTRICT. 91

16A.0 EXTERNAL LIGHTING 93

16A.1 PURPOSE AND INTENT. 93
16A.2 APPLICABILITY. 93
16A.3 GENERAL STANDARDS. 93

17.0 NON-CONFORMING USES AND BUILDINGS 94

17.1 NON-CONFORMING BUILDINGS, STRUCTURES, AND USES. 94
17.2 SUB-STANDARD LOTS OF RECORD. 94
17.3 SPECIAL EXCEPTIONS. 94
17.4 STATUS OF VARIANCES AND SPECIAL EXCEPTIONS. 95

18.0 PHASING OF DEVELOPMENTS 96

18.1 INDICATORS OF GROWTH IMPACT. 96
18.2 MONITORING GROWTH INDICATORS. 96
18.3 PHASING OF SUBDIVISION AND CLUSTER DEVELOPMENTS. 96
18.4 (REPEALED MARCH 2000) 97

19.0 ENFORCEMENT AND ADMINISTRATION 98

19.1 BOARD OF SELECTMEN. 98
19.2 BUILDING INSPECTOR. 98
19.3 PERMITS. 98
19.4 VIOLATIONS OF THE ORDINANCE. 98

20.0 BOARD OF ADJUSTMENT 99

21.0 AMENDMENTS 99

22.0 FINES AND PENALTIES 99

23.0 SAVING CLAUSE 99

24.0 WHEN EFFECTIVE 99

25.0 IMPACT FEES 100

25.1 PURPOSE. 100
25.2 DEFINITIONS. 100
25.3 AUTHORITY TO ASSESS IMPACT FEES. 101
25.4 ASSESSMENT METHODOLOGY. 101
25.5 ADMINISTRATION OF IMPACT FEES. 101
25.6 RETURN OF IMPACT FEES. 102
25.7 OTHER AUTHORITY RETAINED. 102
25.8 REVIEW AND ESTABLISHMENT OF FEES. 102

1.0 PREAMBLE

In pursuance of authority conferred by Chapter 674:16, N.H. Revised Statutes Annotated, l955, as amended, (N.H. RSA), the following Ordinance is hereby enacted by the voters of the Town of Wilton, New Hampshire, in Official Town Meeting this 13th day of March 1990.

The purpose of this ordinance is to promote and protect the health, safety, prosperity, convenience or general welfare of the inhabitants, as well as efficiency and economy in the process of development of the incorporated Town of Wilton, by the promotion of good civic design and arrangements including protection of farmlands and open space; by wise and efficient expenditures of public funds; by the adequate provision of public utilities and other public requirements; and by other means. The Articles of this Ordinance take precedence over the articles of the "Wilton Code of Building and Sanitation" and supersede all "Zoning Ordinances" previously adopted by the Town of Wilton, New Hampshire.

For the purpose of this Ordinance, wherever the effective date of the ordinance is referred to herein, this reference is defined as the date the particular section or subsection was first adopted by the Town of Wilton.

2.0 DISTRICTS

(Adopted March 2003.)

For the purposes of this ordinance, the Town of Wilton is divided into the following primary Zoning Districts: RESIDENTIAL DISTRICT, GENERAL RESIDENCE AND AGRICULTURAL DISTRICT, COMMERCIAL DISTRICT, INDUSTRIAL DISTRICT and OFFICE PARK DISTRICT. All land in the Town of Wilton is located within one of the above-mentioned primary districts.

The ordinance also defines the following overlay Zoning Districts: RESEARCH AND OFFICE PARK DISTRICT, GRAVEL EXCAVATION DISTRICT, FLOODPLAIN CONSERVATION DISTRICT, WETLANDS CONSERVATION DISTRICT, AQUIFER PROTECTION DISTRICT, AGE-RESTRICTED HOUSING DISTRICT, WATERSHED DISTRICT and PERSONAL WIRELESS SERVICE FACILITIES DISTRICT. Land in the Town of Wilton may be located outside of any overlay district or within one or more overlay districts in addition to its underlying primary district. Each Zoning District is described by a section of this ordinance, which specifies the permitted uses and the restrictions on uses in that district. Land in an overlay district may have additional permitted uses or additional restrictions beyond those provided in its underlying primary district. *(Amended March 2020)*

The location of each district is specified in the section of the ordinance that describes the district; except that GENERAL RESIDENCE AND AGRICULTURAL DISTRICT encompasses all land not listed as belonging to any other primary zoning district. The Zoning Districts and their boundaries are also depicted by colors or lines on a Zoning Map that is filed with the Wilton Town Clerk.

In the event the zoning district or overlay zoning district locations cannot be determined from the zoning ordinance text, then the adopted zoning or zoning overlay map may be used to resolve ambiguities in the district locations along with Town Meeting and Planning Board minutes. *(Amended March 2007)*

3.0 DEFINITIONS

For the purpose of this Ordinance, certain terms are defined as provided in this section.

3.1.1 Accessory Building. A building subordinate to the permitted main building on a lot, which is used for purposes incidental to and customarily or habitually associated with the use of the main building. *(Amended March,2009)*

3.1.1-a Accessory Use. A use of a lot or building which is occasioned by and subordinate to the permitted primary use of that lot or building, and is customarily or habitually associated with it. *(Adopted March 2005; Amended March 2009)*

3.1.2 Aircraft: Airplanes, helicopters, dirigibles, blimps, or other engine powered aeronautical contrivance used for air transportation.

3.1.3 Aquifer. Land areas determined to overlay water saturated stratified drift deposits of sands and/or gravels capable of yielding private and public potable water supplies.

3.1.4 Buffer. An area within a lot or site, generally adjacent to and parallel with the property line, either consisting of natural existing vegetation or created by the use of trees, shrubs, fences and/or berms designed to limit continuously the view of and/or sound from the site to adjacent sites or properties. *(Amended March 1991)*

3.1.5 Building. A structure having a roof or cover and forming a shelter for persons, animals or property.

3.1.6 Dwelling. A building containing one or more dwelling units used for non-transient occupancy. The term "dwelling" includes but is not restricted to private homes, apartment buildings, condominiums and town houses. (See also "Hotel" and "Rooming House".)

a. Single Family Dwelling. A building containing one dwelling unit.

b. Duplex or Two-Family Dwelling. A building containing two (2) dwelling units attached, designed or arranged as separate housekeeping units within the dwelling.

c. Multi-Family Dwelling. A building containing three (3) or more dwelling units attached, designed or arranged as separate housekeeping units within the dwelling.

3.1.7 Dwelling Unit. One or more living or sleeping rooms arranged for the use of one or more individuals living as a single-family housekeeping unit, with cooking, living, sanitary and sleeping facilities. (See also "Lodging Unit".)

3.1.8 Family. A group of individuals, whether or not related, living together in a dwelling unit in a structured relationship constituting an organized housekeeping unit. (*Amended March 2018*)

3.1.9 Floodplain. A land area adjacent to a river, stream, lake or other watercourse subject to flooding during periods of high water and runoff including but not limited to those areas generally identified on the Town of Wilton, NH, Flood Boundary and Floodway Maps and the Flood Insurance Rate Maps prepared by the U.S. Department of Housing and Urban Development, Federal Insurance Administration.

3.1.10 Frontage. The continuous length of a lot bordering on the public right-of-way providing the principal route of access to a lot, subdivision or other type of development.

3.1.11 Hazardous or Toxic Materials or Liquids. Materials or liquids that pose a threat to the environment, whether in use, storage or transit, including without exception hazardous waste identified and listed in accordance with Section 3001 of the Federal Resource Conservation and Recovery Act of 1976, and any amendments thereto.

3.1.12 Home Occupation. A business operated in a building that is incidental and subordinate to the use of the building or lot for residential purposes in compliance with the criteria established for home occupations in section 5.3.1 or 6.6.1 of this Ordinance. *(Adopted March 1998)*

3.1.13 Hospital. A building providing twenty-four (24) hour in-patient services for the diagnosis, treatment and care of human ailments.

3.1.14 Hotel. A building or buildings containing one or more dwelling units or lodging units intended or used primarily for transient occupancy, together with any common cooking, dining, living or sanitary facilities for the shared use of the occupants. The term "hotel" includes, but is not restricted to, inns, motels, motor inns, tourist homes and tourist courts. (See also "Dwelling" and "Rooming House".)

3.1.14-a Junk. Old or scrap copper, brass, rope, rags, batteries, paper, trash, rubber debris, waste, or junked, dismantled, or wrecked automobiles, or parts thereof, iron, steel, and other old or scrap ferrous or nonferrous material. *(Adopted March 2009)*

3.1.14-b Junkyard. or Automotive recycling (salvage) yard' - An establishment or place of business which is maintained, operated, or used for storing, keeping, buying or selling junk, or for the maintenance or operation of an automotive recycling (salvage) yard, and includes garbage dumps and sanitary fills. The word does not include any motor vehicle dealers registered with the director of motor vehicles under RSA 261:104 and controlled under RSA 236:126. *(Adopted March 2009)*

3.1.15 Lodging Unit. One or more living or sleeping rooms arranged for occupancy by a single family, but sharing common cooking, dining, living or sanitary facilities with other lodging units. (See also "Dwelling Unit".)

3.1.16 Lot or Parcel. A single area of land defined by metes and bounds or boundary lines as shown in a recorded deed or on a recorded plan. *(Amended March 1992)*

3.1.17 Lot, Building. A lot having the minimum area and frontage to meet the requirements of this ordinance.

3.1.18 Lot Line. A line dividing one lot from another.

a. Front lot line. The lot line dividing the lot from a street right-of-way and providing the principal route of access to the lot or subdivision.

b. Rear lot line. The lot line opposite to the front lot line.

c. Side lot line. Any lot line not a front or rear lot line.

3.1.19 Lot of Record. Land designated as a separate and distinct parcel in a legally recorded deed filed in the record of Hillsborough County, New Hampshire. *(Amended March 1992)*

3.1.20 Manufactured Housing. Any structure, transportable in one or more sections, which, in the traveling mode, is 8 body feet or more in width and 40 body feet or more in length, or when erected on site, is 320 square feet or more, and which is built on a permanent chassis and designed to be used as a dwelling with or without a permanent foundation when connected to required utilities, NH RSA 674:31. Manufactured housing does not include pre-site built housing.

3.1.21 Manufactured Housing Park. A land area occupied or designed for occupancy by two or more manufactured homes in use for living purposes.

3.1.21-a Mean High Water Level. The line on the shore, running parallel to the water body, that defines the high level of the water body, established by the fluctuations of water and indicated by physical characteristics such as a clear, natural line impressed on the immediate bank, shelving, changes in the character of soil, destruction of terrestrial vegetation, the presence of litter or debris, or other appropriate means that consider the characteristics of the surrounding areas. Where the mean high water level is not easily discernable, the mean high water level may be determined by the NH Department of Environmental Services. *(Adopted March 2020)*

3.1.22 Non-conforming Building or Structure, or Use. A building or structure, or a use of any building, structure, or land, which, in whole or in part, does not conform to the regulations of the district in which the building, structure, or use is located, but which did conform to the regulations, if any, in effect at the time the building, structure, or use came into existence, or was permitted by variance, and which has remained in existence since that time with no interruption of more than one (1) year. *(Amended March 2007)*

3.1.23 (Deleted). *(March 2007)*

3.1.23-a Off Premise Sign. A sign that directs attention to an activity which is not related to the premises where such sign is located or to which it is affixed.

3.1.24 Perennial Stream. Any stream with a minimum drainage area of one (1) square mile, 640 acres.

3.1.25 Pre-site Built Housing. Any structure designed primarily for residential occupancy which is wholly or in substantial part made, fabricated, formed or assembled in off-site manufacturing facilities in conformance with the United States Department of Housing and Urban Development minimum property standards and local building codes, for installation, or assembly and installation, on the building site, NH RSA 674:31-a. Pre-site built housing does not include manufactured housing.

3.1.26 Public Right-of-Way. Either a town, state and federal highways and the land on either side as covered by statutes, OR: a private road which is depicted on a subdivision plan approved by the Wilton Planning Board, is designed and constructed to town road standards, is offered to the Town of Wilton for acceptance as a town road (whether or not it is accepted), is guaranteed to remain open in perpetuity to public use for access to the property in the subdivision, and whose permanent maintenance is governed by covenants approved as part of the subdivision approval. *(Amended March 2009)*

3.1.27 Rooming House. A building containing one or more lodging units used primarily for rental to non-transient occupants, together with any common cooking, dining, living or sanitary facilities for the shared use of the occupants. The term "rooming house" includes, but is not restricted to, boarding houses, lodging houses and dormitories. See also "Hotel" and "Dwelling".

3.1.28 School. A learning center having an academic curriculum approved for attendance purposes by the State Department of Education.

3.1.29 Setback. The minimum distance between two (2) points prescribed by the Ordinance.

3.1.30 Sign. Any lettering, word, numeral, pictorial representation, emblem, trademark, device, banner, pennant or other figure of similar character located outdoors and being a structure or any part thereof, or attached to, painted on, or in any other manner represented on a building or other structure, and used to announce, direct, attract, advertise or promote.

3.1.31 Structure. Any construction, erection, assemblage or other combination of materials upon the land which is made in such a manner as to imply that it will remain in position indefinitely or which in fact remains on the land for a period of time in excess of thirty (30) days. Structures do not include driveways, fences, stonewalls, mailboxes, culverts, and drainage measures approved by the Planning Board as part of a subdivision or site plan. *(Amended March 2003)*

3.1.32 Town Zoning Maps. Maps of the Town of Wilton that shows the boundaries of the zoning districts or zoning overlay districts. Maps shall be adopted by the Planning Board after conducting a properly noticed public hearing, with official copies residing in the Town Clerk's office. Approved maps shall depict districts, overlay districts and their boundaries as approved in the zoning ordinance text by voters at Town Meeting. *(Amended March 2007)*

3.1.32-a Trip. A single vehicle movement to or from a specified location, or between two specified points. A "round trip" counts as two trips. *(Adopted March 2005)*

3.1.33 Yard, Front. That portion of the lot nearer to the front lot line than the principal building.

3.1.34 Wetlands. An area that is defined from time to time by RSA 482-A:2, X and which shall, unless RSA 482-A:2, X indicates otherwise, include land that is inundated or saturated by surface or groundwater at a frequency and duration sufficient to support, and that under normal circumstances, does support a prevalence of vegetation typically adapted for life in saturated soil conditions. Wetlands shall be delineated as set forth time to time in the rules adopted under RSA 482-A. *(Adopted March 2002, Amended March 2020)*

3.1.34-a Water body. Any pond, lake, river, stream or similar area up to its Mean High Water Level. *(Adopted March 2020)*

4.0 GENERAL PROVISIONS

4.1 Alteration and Removal of Materials.

Excavation of earth materials regulated under RSA 155-E are permitted only in the Gravel Excavation District under the restrictions of Chapter 9B of this Ordinance, except where exempted under the provisions of RSA 155-E:2 and RSA 155-E:2-a

4.2 Sanitary Protection.

All sanitary waste will be properly disposed of in such a manner as to prevent all health hazards. All uses as set forth below shall be serviced either by individual septic systems or the town sewer system.

4.2.1 Individual Systems.

All individual septic system shall meet the following specifications:

a. Sanitary systems shall be constructed and maintained in accordance with the standards set and enforced by the New Hampshire State Department of Health and Welfare and by the New Hampshire Water Supply and Pollution Control Division (WSPCD);

b. No systems shall be located in poorly or very poorly drained soils;

c. Sanitary systems shall be setback from wetlands, water bodies, open water bodies and perennial streams as follows:

   1. Systems located entirely or partially in highly permeable soils (a permeability of six (6) inches per hour throughout as indicated in the USDA Soil Survey of Hillsborough County, New Hampshire, Western Part,) - 125 feet;

   2. Systems located entirely or partially in somewhat poorly drained soils, moderately well drained soils or soils with a restrictive layer and a slope of 8 percent or greater - 100 feet;

   3. Systems located in all other soils - 75 feet.

d. All systems shall be inspected by the State of New Hampshire before covering. The cost of the inspection will be borne by the installer.

4.2.2 Town Sewer System.

New construction in areas serviced by Town sewer shall be required to connect to the system.

4.3 ***Unregistered Motor Vehicles.***

No more than two (2) unregistered motor vehicles which are no longer in condition for legal use on the public highways are permitted on a lot. (Adopted March 1993.)

4.4 ***Special Exceptions.***

Any Special Exceptions permitted by this Ordinance may be granted by the Zoning Board of Adjustment only upon a finding that:

a. The proposed use is not permitted by the Ordinance in the absence of a Special Exception.

b. The proposed use is consistent with and will not substantially affect the character of the neighborhood in which it is proposed.

c. The proposed use will comply with section 4.6, Performance Standards.

d. The proposed use will not cause any unreasonable diminution of surrounding area property values.

e. The effect of the proposed use on traffic in the neighborhood and in the Town will generally be acceptable.

f. Sewer, water and other public facilities are adequate for the proposed use.

g. Adequate off-street parking is available for the proposed use.

h. The proposed use will not be detrimental to the attractiveness of the Town.

i. The proposed use is consistent with the spirit of the Zoning Ordinance.

j. The proposed use meets all other criteria enumerated in the section of the Ordinance which permits the particular Special Exception.

4.5 ***Variances.***

If construction or other improvements have occurred on a property subsequent to the enactment of some restriction in this ordinance, then an inability to satisfy that restriction which is, in whole or in part, a consequence of the prior construction or improvements, shall not be deemed to be a hardship for the purposes of granting a variance for proposed future use. (Adopted March 12, 1996.)

4.6 Performance Standards.

All land use activities shall be conducted and operated to minimize negative environmental impacts to neighboring properties from emissions of smoke, noise and odors, vibrations, discharges, and storm water run off, and shall conform to all State and Federal regulations and the following performance standards.

4.6.1 Vibrations. Every use shall be so operated that ground vibration inherently and recurrently generated is not readily perceptible, without instruments, at any point on the property line of the property on which the use is located.

4.6.2 Noise. Objectionable noise due to intermittent beat, frequency, shrillness or excessive volume shall be muffled or eliminated so as not to become a nuisance to adjacent property.

4.6.3 Odor. Every use shall be so operated as to prevent the emission of objectionable or offensive odors in any such concentrations as to be readily perceptible at any point at or beyond the lot line of the property on which the use is located.

4.6.4 Smoke. No use shall be so operated that it degrades the quality of the air by emitting smoke or particulate matter.

4.6.5 Discharges. No use shall be so operated that it emits hazardous waste or materials.

4.6.6 Stormwater Runoff. Where development is within an aquifer area, all surface storm water shall be kept on-site and handled in such a manner as to allow the water to infiltrate into the ground before leaving the site.

4.6.7 Wetlands Conservation District Setback. Buildings must be set back fifty (50) feet from delineated wetlands and water bodies.

4.6.8 Wetlands Conservation District Buffer. No fertilizer shall be applied to the vegetation or soils located within 25 feet of the delineated wetlands or water bodies. Between 25 and 50 feet from the delineated wetland or water body, slow or controlled release fertilizer, as defined by the NH Department of Environmental Services, may be used. No chemicals, including pesticides or herbicides of any kind, shall be applied to ground, turf or established vegetation within 50 feet of the delineated wetland or water body, except if applied by a licensed horticultural professional.

In cases where this ordinance conflicts with RSA 483-B, Shoreland Water Protection Act, the state statute shall prevail.

4.7 Temporary Placement of Manufactured Homes and Office Facilities

4.7.1 Temporary Placement of Manufactured Homes.

The Building Inspector may grant a permit to temporarily locate a manufactured home on the same lot as a permanent dwelling or building for a period of up to twelve months while a dwelling is being initially constructed or substantially reconstructed; or any building is being reconstructed after damage by fire or other natural cause. In cases of hardship, the Building Inspector may grant one six-month extension to the permit. At the end of the twelve-month period or the extension, the manufactured home must be removed from the lot. The intent of

this section is not to create an additional dwelling unit on any lot. The temporary dwelling unit or unit shall be serviced by existing or new approved septic/sewer and water systems. (Amended March 2000.)

4.7.2 Temporary Placement of Office Facilities.

The Building Inspector may grant a permit to temporarily locate office facilities for a period of up to six months while a permanent structure is being reconstructed after damage by fire or other natural cause. Within sixty days (60) days of the issuance of a permit, an application for site plan review must be submitted to the Planning Board showing the permanent location of all office facilities. In cases of hardship, the Building Inspector may grant one six month extension to the permit. At the end of the six month period or the extension, the temporarily office facility must be removed from the lot. The intent is not to create additional office facilities on any lot. The temporary office facilities shall be serviced by existing or new approved septic/sewer and water systems. (Adopted March 1999.)

4.8 Private Aircraft Landings and Takeoffs

The use of lands for private aircraft landings and take-offs, or the operation of related equipment on private land, by the owner of such land or by a person who resides on such land are not valid accessory uses. Such use of land is considered a primary use and is not a permitted use in any zoning district within the Town of Wilton.

4.9 Notification of Abutters

(Adopted March 2003.)

Applications to the Zoning Board of Adjustment and Planning Board shall require notification of the property owner(s), applicant(s), all persons required under RSA 676:4 I.(d), and RSA 676:7 I (a), and all property owners separated by a railroad right-of-way.

5.0 RESIDENTIAL DISTRICT

The purpose of this district is to provide opportunities for mixed types of residential development at a high density where appropriate services exist or are available. The extent of this district is determined by the designated residential boundaries on the zoning map.

5.0.1 District Location. The Residential District encompasses the following areas within the Town of Wilton *(Amended March 1995; Amended March 2010)*:

a. The area in west Wilton south of NH Route 101 as delineated on the Town of Wilton Tax Map C encompassing lots 106 through 114 inclusive; 117, 118, 119 and part of 120 drawing a straight line from the northwest corner of 118 to the northeast corner of 119; 122 through 124 inclusive; and 137 through 141. *(Amended March 2010)*

b. The area in Wilton Center as delineated on the Town of Wilton Tax Map C encompassing lots 62, 63, 64, part of 65 drawing a straight line from the southwestern corner of 66 to the northeast corner of lot 63, 66, and 67; 72, 73, parts of D-140-1 and C-74 east of a straight line drawn from the southeastern corner of 72 to the northwestern corner of 76, 75,77 and 78; and 81, 82 and 84. *(Amended March 2010)*

c. Tax Map F all land east of NH Route 101 between the north and south intersections of Intervale Road from the western edge of the 150 foot Commercial district to the eastern edge of the Souhegan River, lot 140 from NH Route 101 to the Souhegan River; Map D lot 99; Map L lots 29, and 48; and Map M lots 6 through 98 inclusive.

d. Tax Map D lots 105, 106-1 through 113 inclusive, 66, 68, 69, 74, 75, 76 and 77; Map M lot 1; Map L lots 1 through 28 inclusive, 30 through 39 inclusive, 42 through 45 inclusive, and 67; and Map J 106 through 109 inclusive, 111, 112, 112-1, 114 through 132 inclusive, 136, 137, 138 east of a straight line drawn from the south western corner of lot 136 to the corner of the southern corner of the jog in the northern line of 138, portion of lot 133, 134, 135 and 139 east of a straight line drawn from the south western corner of lot 136 to the south western corner of lot 133. *(Amended March 2010)*

e. Tax Map J part of lot 12 east of a line drawn from the western corner of lot 76 on Dale Street to the jog in lot 12; lots 13 through 42 inclusive, 62 through 78 inclusive, 80, and 92 through 98 inclusive; Map K lots 15 through 37 inclusive, 48 through 62 inclusive, 67 through 84 inclusive, 86 through 102 inclusive, 105 through 153 inclusive, 155 through 157 inclusive and 164. (*Amended March 2010)*

5.1 Permitted Uses.

A building may be erected, altered or used and a lot may be used or occupied for:

a. Single family and duplex family dwellings and accessory uses.

b. Multi-family dwellings containing three dwelling units with site plan approval by the Planning Board.

c. A maximum of three (3) dwelling units per lot is allowed for any new construction on Town water and sewer and a maximum of two (2) dwelling units per lot in the remainder of this district.

d. Only one dwelling per lot is allowed except as provided by the Cluster Development Ordinance. The number of dwelling units per building shall be determined by the density provisions of this section.

5.2 ***Lot Requirements.***

5.2.1 Area. Minimum lot size one-half (0.5) acre per dwelling unit when served by both public water and sewer and one (1) acre per dwelling unit for lots not served by both public water and sewer. Wetlands, water bodies and land contained in the 100 year floodplain must be excluded from the calculation of the minimum lot area. (Amended March 1992.)

5.2.2 Frontage. One hundred (100) feet on a public right-of-way, Class V or better.

5.2.3. Setbacks. Thirty-five (35) feet front. Fifteen feet (15) for all other lot lines. For each corner lot, the side setback abutting the street shall be thirty-five (35) feet. No buildings or associated uses, including but not limited to swimming pools, antennas and satellite dishes, are permitted in the setback. (Amended March 1991, March 1994.)

5.2.4. (Reserved.) (Amended March 1991.)

5.2.5 Structure height. Not to exceed forty-five (45) feet or two stories.

5.3 ***Special Exceptions.***

The following uses will only be allowed as special exceptions by the Zoning Board of Adjustment and site plan review and approval by the Planning Board. (See also Section 4.4)

5.3.1 Home Occupations. Any home occupation shall be permitted as a special exception provided it complies with the requirements of this section. When considering an application for a home occupation, the Zoning Board of Adjustment shall consider the location of the proposed use, the area of the lot, the type and density of surrounding development, existing buffers and screens between the proposed use and surrounding development, and the compatibility of the proposed use with the surrounding neighborhood. *(Amended March 1992)*

a. The home occupation shall be incidental and secondary to the use of the dwelling unit as a residence. *(Amended March 1992)*

b. Home occupations shall be carried on by the resident owner, resident members of the owner's family, a resident tenant, or resident members of the tenant's family.

c. Two (2) non-family employees are permitted on the premises.

d. No additions or changes shall be made to the residence that will make it impractical to revert the building to purely residential use. *(Amended March 1992)*

e. Exterior storage of materials or equipment is prohibited. *(Amended March 1992)*

f. In addition to the parking area required for the primary residential use, sufficient off-street parking shall be provided for any non-resident employees, customers and suppliers who may normally be expected to need parking at one time. Driveways may be used for client parking. Where additional space is desired, a maximum of two (2) parking spaces is

permitted; however, those spaces shall not be located in the front yard. Parking spaces shall be a minimum of nine feet by eighteen feet (9' X 18') per space.

g. Traffic generated by the home occupation shall not create safety hazards or be substantially greater in volume than would normally be expected in the neighborhood. *(Amended March 1992)*

h. Home Occupations shall be conducted in accordance with all Town regulations, state laws and licensing requirements. *(Amended March 1992)*

i. When a business outgrows the standards established for a home occupation, it must relocate into a commercial or industrial district.

5.3.1.1 Special Exception Not Required
(Adopted March 1998)

A home occupation may be conducted without a special exception from the Zoning Board of Adjustment and without site plan review by the Planning Board provided that, in addition to the requirements of the preceding section (5.3.1), it also satisfies the following standards:

a. The home occupation shall occupy no more than 20% of the existing, gross heated floor area of the primary residence or the structure in which the home occupation is operated.

b. There shall be no customer or client visits to the premises and commercial traffic for the delivery or pick-up of materials associated with the home occupation shall be limited to five visits per week. (excluding regular US Postal Service residential service).

c. The home occupation shall not employ any non-resident full time or part time employees on the premises.

d. No signs are allowed to advertise a home occupation.

e. There shall be no outside operation(s) related to the home occupation.

5.3.2 Bed and Breakfasts. Up to four lodging units may be created and rented in an existing dwelling, and meals may be provided to the persons renting the lodging units. The requirements for a bed and breakfast are the same as those for a home occupation, except that requirement 5.3.1 a., shall not apply.

5.3.3 Houses of Worship. Houses of worship including, but not limited to, churches, synagogues, parish houses, mosques, convents and other accessory uses subject to the following conditions (*Amended March 2018*):

a. Minimum frontage of 200 feet on a Class V or better road;

b. No off-street parking shall be located within the setbacks nor within the front yard;

5.3.4 Hospitals, emergency medical centers and clinics. Hospitals, emergency medical centers and clinics subject to the following conditions:

a. Minimum frontage of 200 feet on a Class I, II or IV road;

b. Primary ingress or egress shall be adequate for the use proposed without having a detrimental impact on the neighborhood.

5.3.5 Civic and municipal buildings.

5.3.6 Schools and day care centers.

a. All public or non-public schools, kindergarten and grades 1 through 12, that come under the rules adopted by the state board of education and administered by the State Department of Education must receive a special exception from the Zoning Board of Adjustment under section 5.3. Home education as defined by RSA 193-A is not required to receive a special exception under section 5.3.1. *(Amended March 2000, March 2014)*

b. Any in-home day care and pre-schooldefined as the regular care or education in a dwelling unit of children not residents of that dwelling unit, that requires state licensing under RSA 170-E, also requires a special exception as a home occupation under section 5.3.1. If state licensing is not required, then the in-home day care, pre-school, or kindergarten is not required to obtain a special exception. *(Amended March 12, 1996, March 2014)*

c. Adult and youth educational and cultural activities are permitted as an accessory use of the existing facilities of schools which are permitted under paragraph (a) above. They must be strictly subordinate and customarily incidental to the permitted school use of the facilities. *(Adopted March 2004)*

d. Accessory Adult Educational Facilities. New facilities, including new buildings, for teacher and instructor training, licensing, accreditation, and development, are permitted by special exception in conjunction with schools which are permitted under paragraph (a) above. Such uses and facilities must be strictly subordinate to and in support of the primary childhood education function of the school, and must be located on the same property or on a property contiguous to the school. New construction is limited to thirty (30) percent of the primary facility's heated gross square footage, but shall not exceed a maximum of ten-thousand (10,000) square feet of total floor area and a maximum of two (2) stories. Uses permitted under this paragraph will also require nonresidential site plan approval from the Planning Board. *(Adopted March 2004)*

e. Daycare Facilities. Daycare and preschool programs are permitted by special exception in conjunction with schools which are permitted under paragraph (a) above. Such programs may be located in existing school buildings or in new buildings constructed for that purpose on the same lot. New construction is limited to thirty (30) percent of the primary facility's heated gross square footage, but shall not exceed a maximum of ten-thousand (10,000) square feet of total floor area and a maximum of two (2) stories. Uses permitted under this paragraph will also require nonresidential site plan approval from the Planning Board. *(Adopted March 2014)*

5.3.7 Multi-family. Multi-family uses of dwellings in existence as of March 14, 1989 upon the following terms and conditions:

a. A maximum of two (2) dwelling units per lot less than one-half (0.5) acre in size where Town water and sewer are available and utilized;

b. A maximum of three (3) dwelling units per lot one-half (0.5) acre or greater in size where Town water and sewer are available and utilized;

c. Two (2) 9' x 18' parking spaces per dwelling unit provided on site; parking spaces for any new dwelling unit(s) shall not be located in the setback; *(Amended March 1991)*

d. And open space in an amount equal to two (2) times the total area occupied by driveways, parking areas and all buildings on site; *(Amended March 1991)*

e. Multi-family conversion will be allowed in the compact Village area defined as the Residential District north of NH Route 101 and east of Holt Road, and those in the Residential District with frontage on Intervale Road served by water and sewer.

5.4 Manufactured Housing.

Manufactured housing is prohibited in the Residential District, except as provided for in Section 4.7. Any property owner or lessee may accommodate the recreational trailer of a non-paying guest for a period not exceeding thirty (30) days in any year. *(Amended March 1993)*

5.5 Accessory Dwelling Units.

(Adopted March 2017)

This section implements the requirements of RSA 674:72, "Accessory Dwelling Units."

5.5.1 Existing Dwellings. A second dwelling unit may be added to any legally existing single family dwelling located in a zoning district where residential uses are permitted, subject to the requirements set forth below. The second dwelling unit may be created in existing space in the dwelling or in a newly constructed addition to the dwelling.

5.5.2 New Construction. A two-family dwelling may be constructed on any lot where a single family dwelling may legally be constructed, subject to the requirements set forth below.

5.5.3 Requirements. The following requirements apply only to development which would not be permitted other than by this section.

a. The two dwelling units must have independent means of ingress and egress, or have ingress and egress through a common space such as a shared hallway to an exterior door.

b. The two dwelling units must share a common interior wall, and there must be an interior door between the two dwelling units.

c. At least one of the two dwelling units must be the principal residence of at least one owner of the dwelling. The two dwelling units must remain in common ownership. Transfer of either dwelling unit to condominium ownership is not permitted. Violation of the

requirements of this paragraph will result in the revocation of the Certificate of Occupancy for the two-family use of the dwelling.

d. At least one of the two dwelling units must have no more than two bedrooms, and a living area of no more than 800 square feet.

e. Requirements for water supply and sewage disposal are the same as for any two-family dwelling. Addition of a second dwelling unit to an existing single family dwelling under section 5.5.1 shall be subject to RSA 485-A:38, "Approval to Increase Load on a Sewage Disposal System."

f. Off-street parking shall be provided for one car for each one-bedroom dwelling unit in the dwelling, and for two cars for each dwelling unit having two or more bedrooms, and shall satisfy any setback requirements pertaining to parking in that Zoning District.

g. A newly constructed addition under section 5.5.1 shall satisfy the setback requirements of the zoning district.

5.5.4. Special Exceptions

5.5.4.1 Living area. When creating a second dwelling unit under section 5.5.1, the maximum living area specified by paragraph 5.5.3(d) may be increased by no more than an additional 100 square feet in order to avoid unreasonable distortions to the floor plan of the dwelling.

5.5.4.2 Parking. When creating a second dwelling unit under section 5.5.1, the parking space requirements of paragraph 5.5.3(f) may be relaxed or waived if the dimensions of the lot and the placement of existing structures on the lot are such that there is no reasonable way to provide the required parking spaces.

6.0 GENERAL RESIDENCE AND AGRICULTURAL DISTRICT

6.0.1 District Location.

The General Residence and Agricultural District encompasses all areas in the Town of Wilton which are not encompassed in the Residential, Commercial, Industrial, or Office Park Districts, as enumerated in Chapters 5, 7, 8, and 9 of this Ordinance. *(March 2010)*

6.1 Permitted Uses.

A building may be erected, altered or used, and a lot may be used or occupied for any of the following purposes, and in accordance with the following provisions:

a. Any use permitted in the Residential District under the same provisions as apply to the use in that district, except that the lot areas shall be governed by section 6.2.

b. All general farming and forestry activities.

6.2 Lot Requirements.

6.2.1 Area. The minimum lot size is two (2) contiguous acres (87,120 square feet) of land per dwelling unit excluding wetlands, water bodies, and land contained within the one hundred (100) year floodplain. *(Amended March 2004)*

6.2.2 Lot Configuration. The minimum width of a lot between any point on any side lot line and any point on any other side lot line measured through any point of the principal building shall be 175 feet. The rear lot line is that line which is furthest from and most nearly parallel to the front lot line. All other lot lines are side lot lines. Triangular and irregularly shaped lots may have no rear lot line.

6.2.3 Frontage. Two hundred (200) feet on a public right-of-way, Class V or better.

6.2.4 Setbacks. Thirty-five (35) feet from all lot lines. No building, or use that requires a building permit, is permitted in the setback. *(Amended March 2001)*

6.2.5 Location of on-site disposal fields. To avoid high concentration of effluent discharges in a localized area, no disposal field shall be located within the setbacks.

6.3 Alternative Lot Requirements.

A lot which does not meet the frontage requirements of section 6.2 may be developed for single family or duplex family residential use if it meets the alternative lot requirements contained in this section. Within this section, such a lot will be referred to as a "reduced frontage lot", and a lot meeting the requirements of section 6.2 will be referred to as a "normal frontage lot".

Any subdivision of a parcel resulting in one or more reduced frontage lots is only permitted upon site plan review and approval by the Planning Board, and upon Planning Board determination that the proposed reduced frontage lot better serves the neighborhood than would a development under the otherwise applicable provisions of this ordinance.

6.3.1 Associated Lot Requirement.

A reduced frontage lot must have contiguous frontage with a normal frontage lot that is within the same subdivision. Adjoining normal frontage lots that are not part of the proposed subdivision cannot be used to satisfy the reduced frontage requirement. A maximum of two (2) reduced frontage lots may be developed with each normal frontage lot. The three (3) lots may not be served by more than two (2) driveways. The principal route of access must be along the lot frontage as defined in this ordinance. *(Amended March 1997)*

6.3.2 Area. Five (5) acres per dwelling unit including a minimum of two (2) acres excluding wetlands, water bodies, and land within the 100 year floodplain. *(Amended March 1992)*

6.3.3 Frontage. Fifty (50) feet on a Class V or better public right-of-way. The Planning Board shall not approve a subdivision containing a reduced frontage lot if a hazardous concentration of egress points is likely to result.

6.3.4 Setbacks. Fifty (50) feet from all lot lines. No buildings or uses that require a building permit are permitted in the setback. *(Amended March 1991)*

6.3.5 Private Ways. Private ways used in association with subdivisions containing reduced frontage lots must comply with the following:

a. A maximum of four (4) dwelling units, two (2) on reduced frontage lots and two (2) on normal frontage lots, may be accessed from one (1) private way.

b. No private way shall enter onto a public road unless two hundred feet (200') of safe, each way, all-season sight distance is established.

c. No private way shall enter onto NH Route 101.

d. The private way must be capable of providing adequate year round access for emergency vehicles.

e. The Planning Board shall be provided with a document establishing the conditions of use of the common private way that are satisfactory to Town counsel and include the following: mutual easements between the lots sharing the private way; provisions for maintenance of the private way; and suitable language to insure that the private way will not become a Town road unless brought up to Town road specifications.

6.4 Cluster Developments.

Cluster development of dwelling units may be permitted under the following conditions.

6.4.1 Area. Minimum development site is fifteen (15) acres.

6.4.2 Frontage. A minimum of five hundred (500) feet of frontage on a Class V or better public right-of-way.

6.4.3 Density. Dwelling unit density shall be determined by the Planning Board in accordance with the provisions of the Cluster Development Regulations. The total number of dwelling units will be determined by the total acreage being submitted for development excluding wetlands, water bodies, and land contained within the one hundred (100) year floodplain.

6.4.4 Open Space. Fifty percent (50%) of the total acreage shall be set aside as open space. Within a one (1) mile radius of the Town Hall where Town water and sewer are available and proposed for use within the cluster development, the open space requirement shall be reduced to forty percent (40%).

6.5 Manufactured Housing.

An individual manufactured house may be located anywhere in this district provided it meets all of the minimum requirements of the district. In addition, open space under manufactured homes shall be enclosed with suitable "skirting". (Amended March 1991.)

6.6 Special Exceptions.

The following uses will only be allowed as special exceptions by the Zoning Board of Adjustment (ZBA) and site plan review and approval by the Planning Board.

6.6.1 Home Occupations. The ZBA may, in appropriate cases subject to appropriate conditions, permit home occupations in compliance with the requirements of this section, Section 5.3.1 Home Occupations and Section 4.6 Performance Standards. The provisions of Section 5.3.1 shall govern home occupations in this district except as otherwise provided for below *(Adopted March 1993).* Home occupations which meet the requirements of Section 5.3.1.1 Special Exception Not Required, shall be permitted without a special exception from the Zoning Board of Adjustment and without site plan review by the Planning Board. *(Adopted March 1998)*

a. The home occupation shall not be evident from the road or other public right-of-way.

b. Materials or equipment stored outside must be adequately screened from adjacent public rights-of-way and properties.

c. Only retail sales which are customary and incidental to the home occupation are permitted.

d. Separate structures may be constructed or placed to accommodate the home occupation if screened from surrounding development and suitable for reversion to a use ancillary and incidental to a residential or agricultural use.

b. The home occupation use shall be clearly subordinate and secondary to the primary use of the property as a residence.

7.0 COMMERCIAL DISTRICT

A building or structure may be erected, altered or used, and a lot may be used or occupied for any of the following purposes in accordance with the following provisions. Any change in use or type of activity in an existing structure or any new construction in this district, other than a single-family dwelling or a two-family dwelling permitted by Section 5.5 of this ordinance, must have prior approval from the Planning Board under the Site Plan Review regulations. *(Amended March 2003, March 2017)*

7.0.1 Commercial District Location. The Commercial District encompasses the following areas within the Town of Wilton. *(Amended March 1992, March 2010, March 2014)*:

a. The area on the south side of NH Route 101 between the north and south intersections of 101 and Intervale Road to a depth of 150 feet from the edge of the State right-of-way.

b. The area on the south side of NH Route 101 in West Wilton as delineated on the Town of Wilton Tax Map C encompassing lots 102, 102-1, 103, 104 and 105. *(Amended March 2002)*

c. The area north and south of Frye Mill Road as delineated on the Town of Wilton Tax Map A encompassing lots 23, 24, 28 and 63. *(Amended March 2010)*

d. *(Deleted 2014)*

e. *(Deleted 2014)*

f. The area south of Main Street near the Milford Line as delineated on the Town of Wilton Tax Map K as lot 163.

g. The area at the intersection of NH Routes 101 and 31 South as delineated on Town of Wilton Tax Map F lots 162, a portion of 163 north of a line drawn from the southeast corner of 164 to the southwest corner of 162 and 164. (Amended March 2001, March 2010)

7.0.2 *(Deleted 2019)*

7.1 Permitted Uses.

The following uses shall be permitted in the Commercial District:

a. Any use permitted in the General Residence and Agricultural District under the same provisions as apply to the use in that district, including density, except that the lot dimensional requirements shall be as specified in this section; *(Amended March 2007)*

b. Duplex and multi-family dwellings, inns, tourist courts, cabins and bed and breakfasts, including such retail businesses within these permitted buildings as are conducted for the convenience of the residents or guests;

c. Retail Services: Establishments engaged in selling goods or merchandise to the general public for personal or household consumption and rendering services incidental to the sale of such goods, including retail stores, restaurants, taverns and banks. Also, establishments primarily engaged in providing services involving the care of a person or his or her apparel (such as barbershops and beauty salons, spas, tailors and dry cleaners); *(Amended March 2019)*

d. Parking garages, parking lots, filling stations, and automotive service stations; *(Amended March 2019)*

e. Business and professional offices;

f. Community buildings, social halls, clubs, lodges, fraternal organizations, theaters, recreation facilities, and amusement centers; *(Amended March 2019)*

g. Greenhouses and florist shops: An establishment where retail and wholesale garden products and produce are sold to the consumer. The establishment imports most of the items sold, but may include a nursery and/or greenhouse, and may include plants, nursery products and stock, potting soil, hardware, other garden and farm variety tools and outdoor furniture; *(Amended March 2019)*

h. Funeral homes;

i. Wholesale establishments in connection with permitted retail establishments, warehousing or merchandise for retail sale within the District.

j. Houses of worship including, but not limited to, churches, synagogues, parish houses, mosques, convents, and other accessory uses; *(March 2010, March 2018)*

k. Hospitals, emergency medical centers and clinics; *(March 2010)*

l. Schools, kindergartens, preschools, and daycare centers, including in-home childcare. *(March 2010)*

m. Medical offices, which provide health services to people on an outpatient basis including doctors, dentists, physical therapists, massage therapist and chiropractors; *(March 2019)*

n. Veterinary clinics which may include facilities for overnight boarding or caring of animals provided that any such facility shall be designed, constructed and operated in such a manner so as not to be a nuisance to adjacent uses by way of noise or odor; *(March 2019)*

o. Libraries, museums; *(March 2019)*

p. Adult day care facilities: Any person, corporation, partnership, voluntary association, or other organization, either established for profit or otherwise, which provides for the daily care and supervision of an adult person away from the person's home and which requires licensing by the State of NH; *(March 2019)*

q. Nanobreweries as defined in NH RSA 178:12-a, Brewpubs as defined in NH RSA 178:13, Wine retail outlets and tasting rooms pursuant to NH RSA 178:8, and Liquor manufacturers pursuant to NH RSA 178:6; *(March 2019)*

r. Light Industry: Assembly, packaging, and/or finishing of products carried on completely within a structure, and involving no outside storage of equipment or materials. Light Industry shall not include any industry, the operation of which could (1) pose a danger of fire or explosion, (2) create significant objectionable vibration, noise, smoke, fumes, odor or dust, (3) produce chemicals, radioactive or other potentially dangerous waste, or (4) adversely affect other private or public properties; *(Amended March 2020)*

s. Mixed Uses: The development of a tract of land or building or structure with two or more different permitted uses such as but not limited to residential, office, retail, public, or entertainment in a compact urban form. Individual uses within a mixed-use property must conform to any requirement within their particular class of use. *(March 2019)*

7.2 ***Lot Requirements.***

7.2.1 Frontage. Frontage shall be as follows:

a. Two hundred (200) feet on a public right-of-way, Class V or better;

b. Deleted 2019.

7.2.2 Setbacks. Setbacks shall be as follows:

a. Front setback - thirty-five (35) feet;

b. Side setback - twenty-five (25) feet;

c. Rear setback - twenty (20) feet;

d. *(Deleted 2019)*

e. No buildings or parking areas are permitted in the front setback or in any setback which abuts a residentially or residential/ agriculturally zoned parcel; *(Amended March 1991)*

f. Parking areas are permitted up to within ten (10) feet of the side or rear lot line of a commercially zoned parcel where it abuts another commercially or industrially zoned parcel; and *(Amended March 1991)*

g. Parking areas shared between two adjacent commercially or industrially zoned parcels may be developed up to the common side or rear lot-line if all other conditions of the district are met. *(Amended March 1991)*

7.2.3 Percentage of Lot Coverage. A maximum of seventy-five percent (75%) of the gross area of any lot shall be occupied by buildings, parking and roadways. Commercial buildings, structures and parking areas in existence as of March 13, 1990 that exceed the permitted lot coverage within the district may be maintained at or rebuilt to the existing level. Any increase in impervious area will not be permitted. *(Amended March 1992)*

7.2.4 Access. Access to lots within the commercial district shall be as follows:

a. Any lot with frontage on NH Route 101 shall be accessed by any other street or side road that is available and only by NH Route 101 if no other alternative exists. If no other access is available, entrance and exit for the lot(s) is limited to one (1) curb cut on NH Route 101 for each lot-of-record existing as of March 11, 1986. If access to a lot is available to a street or side road other than NH Route 101, access to the lot shall be taken from the street or side road.

b. As each lot within this district is developed, provisions shall be made during the site plan review process for the lay-out and construction of streets or side roads as the Planning Board shall determine necessary to permit travel between adjacent lots without accessing NH Route 101. To encourage shared lot access, where at all possible and practical, the location of all accessory street or roadway curb cuts shall be situated to allow adjacent lots to also take advantage of or share the same point of access along the street or roadway.

c. Access to any Town road or State highway shall require Town or State permit approval.

7A.0 DOWNTOWN COMMERCIAL DISTRICT

The purpose of this district is to concentrate development, allow and encourage a vibrant mix of land uses, encourage infill development, preserve the historic character of the downtown, and provide a pedestrian-friendly environment. *(Adopted March 2019)*

7A.1 Downtown Commercial District Location.

The Downtown Commercial District encompasses the following areas within the Town of Wilton:

a. The area in the western section of downtown Wilton located north and south of Forest Road as delineated on the Town of Wilton Tax Map J encompassing lots 79, 90, 90-1A, 90-1B, 91, 99, 100 and 101.

b. The area in Downtown Wilton north and south of Main Street as delineated on the Town of Wilton Tax Map J encompassing lots 43, 44, 45, 46, 47, 48, 50, 51, 52, 53, 54, 55, 56, 57, 58, 59, 60, 60-1, 61, 62, 63, 64; and Tax Map K encompassing lots 63, 64, 64-1, 65, 85, 103, 104, 170, 171, 172, 173, portions of lot 66 south of a line drawn between the southeast corner of 67 and the northwest corner of 76, and portions of 166 west of a line drawn between due south from the southeast corner of 103 to the river.

7A.1.1 Main Street Overlay District Location. The Main Street Overlay District encompasses the following areas within the Town of Wilton, which are subject to all provisions in the Downtown Commercial District, except where noted otherwise:

a. The area in Downtown Wilton north and south of Main Street from the intersection of Forest Road to the intersection of Park and Howard Streets as delineated on the Town of Wilton Tax Map J encompassing lots 43, 44, 45, 46, 47, 48, 50, 51, 52, 53, 54, 55, 56, 57, 58, 59, 60, 60-1, 61, 62, 63, 64; and Tax Map K encompassing lot 173.

7A.2 ***General Provisions.***

A building or structure may be erected, altered or used, and a lot may be used or occupied for any of the following purposes in accordance with the following provisions.

7A.3 ***Permitted Uses.***

The following uses shall be permitted in the Downtown Commercial District:

7A.3.1 Residential Uses.

a. Any use permitted in the Residential District (except where prohibited under Sec. 7A.6.b), under the same provisions as apply to the use in that district, except that the lot dimensional requirements shall be as specified in this section.

7A.3.2 Commercial Uses.

a. Bed and breakfasts, including such retail businesses within these permitted buildings as are conducted for the convenience of the residents or guests;

b. Retail Services: Establishments engaged in selling goods or merchandise to the general public for personal or household consumption and rendering services incidental to the sale of such goods, including retail stores, restaurants, taverns and banks. Also, establishments primarily engaged in providing services involving the care of a person or his or her apparel (such as barbershops and beauty salons, spas, tailors and dry cleaners);

c. Parking garages and parking lots;

d. Business and professional offices;

e. Community buildings, social halls, clubs, lodges, fraternal organizations, theaters, recreation facilities, and amusement centers;

f. Greenhouses and florist shops: An establishment where retail and wholesale garden products and produce are sold to the consumer. The establishment imports most of the items sold, but may include a nursery and/or greenhouse, and may include plants, nursery products and stock, potting soil, hardware, other garden and farm variety tools and outdoor furniture;

g. Houses of worship including, but not limited to, churches, synagogues, parish houses, mosques, convents, and other accessory uses;

h. Preschools, and daycare centers, including in-home childcare;

i. Medical offices, which provide health services to people on an outpatient basis including doctors, dentists, physical therapists, massage therapist and chiropractors

j. Veterinary clinics which may include facilities for overnight boarding or caring of animals provided that any such facility shall be designed, constructed and operated in such a manner so as not to be a nuisance to adjacent uses by way of noise or odor;

k. Libraries, museums;

l. Adult day care facilities: Any person, corporation, partnership, voluntary association, or other organization, either established for profit or otherwise, which provides for the daily care and supervision of an adult person away from the person's home and which requires licensing by the State of NH; and

m. Nanobreweries as defined in NH RSA 178:12-a, Brewpubs as defined in NH RSA 178:13, Wine retail outlets and tasting rooms pursuant to NH RSA 178:8, and Liquor manufacturers pursuant to NH RSA 178:6;

7A.3.3 Industrial Uses.

a. Light Industry: Assembly, packaging, and/or finishing of products carried on completely within a structure, and involving no outside storage of equipment or materials. Light Industry shall not include any industry, the operations of which could (1) pose a danger of fire or explosion, (2) create significant objectionable vibration, noise, smoke, fumes, odor or dust, (3) produce chemicals, radioactive or other potentially dangerous waste, or (4) adversely affect other private or public properties.

7A.3.4 Mixed Uses.

a. Mixed Uses: The development of a tract of land or building or structure with two or more different permitted uses such as but not limited to residential, office, retail, public, or entertainment.

7A.4 Site Plan Review Required.

Any change or expansion in use in an existing structure or any new construction in this district must have prior approval from the Planning Board under the Site Plan Review regulations, with the following exceptions:

7A.4.1 Residential Uses. Site Plan Review is not required for single family dwellings or for two-family dwellings permitted by Section 5.5 of this ordinance.

7A.4.2 Change to a Permitted Commercial Use. Site Plan Review is not required for a change from any use to a commercial use listed in section 7A.3.2, provided that there is an existing approved site plan for the property and the change does not result in any exterior changes on the property.

7A.5 Lot Requirements.

7A.5.1 Frontage. Frontage shall be as follows:

a. Twenty-five (25) feet.

7A.5.2 Setbacks. Setbacks shall be as follows:

a. Front setback – twenty-five (25) feet;

b. Side setback – fifteen (15) feet;

c. Rear setback – fifteen (15) feet;

d. Setbacks on lots located within the Main Street Overlay District - at a depth to conform with existing neighboring buildings;
e. No buildings or parking areas are permitted in the front setback or in any setback which abuts a residentially or residential/ agriculturally zoned parcel;

f. Parking areas are permitted up to within ten (10) feet of the side or rear lot line of a commercially zoned parcel where it abuts another commercially or industrially zoned parcel; and

g. Parking areas shared between two adjacent commercially or industrially zoned parcels may be developed up to the common side or rear lot-line if all other conditions of the district are met.

7A.5.3 Percentage of Lot Coverage. There is no maximum building coverage (subject to any setback requirements), except that the site must be designed to dispose of all runoff and drainage without impacting other properties.

7A.5.4 Access. Access to lots within the downtown commercial district shall be as follows:

a. Access to any Town road or State highway shall require Town or State permit approval.

7A.5.5 Parking. Parking requirements shall be as follows:

a. All non-residential uses listed in sections 7A.3.2, 7A.3.3, and 7A.3.4 are exempt from the provision of off-street parking facilities standards established in the Site Plan Review Regulations; and

b. Any residential use listed in section 7A.3.1 is required to have on-site or fee ownership parking with at least one parking space per bedroom.

7A.6 Prohibited Uses.

a. Filling Stations and Automotive Service Stations;

b. Residential uses on the ground floor fronting Main Street for lots located within the Main Street Overlay District;

c. Schools and kindergartens;

d. Funeral homes;

e. Wholesaling and warehousing on the ground floor fronting Main Street for lots located in the Main Street Overlay District; and

f. Inns, tourist courts, and cabins.

8.0 INDUSTRIAL DISTRICT

This district provides a location for the establishment of industrial facilities and operations to improve employment opportunities and broaden the tax base in the Town of Wilton.

All industrial establishments will meet the following provisions.

a. All future industrial establishments in this district must receive prior approval to build based on the proposed layout as evidenced by satisfactory working plans submitted to the Planning Board under the Site Plan Review procedure adopted by the Planning Board.

b. Any expansion of an existing industrial establishment must have prior approval based on the proposed layout as evidenced by satisfactory working plans submitted to the Planning Board under the Site Plan Review procedures adopted by the Planning Board.

c. Any alterations of the nature of the industry carried on in an existing industrial establishment must have prior approval from the Planning Board under the Site Plan Review procedure adopted by the Planning Board.

8.0.1 District Location. The Industrial District encompasses the following areas within the Town of Wilton: *(Amended March 2010)*

a. The area in northern Wilton bordering the Town of Lyndeborough along Forest Road and the B&M Railroad right-of-way. As delineated on the Town of Wilton Tax Map, this includes Lots B-3 through B-6 (inclusive), B-8, B-10, B-11, B-97 through B-112 (inclusive). Also, lots B-117 through B-121 (inclusive) to a depth of 350 feet from the centerline of Forest Road. (Amended March 1995, March 2003.)

b. The area adjacent to NH Route 101 west of the Souhegan River Bridge and the area adjacent to NH Route 31 and Mansur Road. As delineated on the Town of Wilton Tax Map, this includes lots D-100, D-101, D-102, E-17, E-23 through E-28 inclusive, a portion of E-29 southeast of a line continuing from the southern-most point of lot 30 to a point on the southern line of lot 29 200 feet west of Greenville Road/Rt. 31. F-11. F-12-1 through F-12 inclusive, F-13 through F-21 inclusive, F-23, F-24, F-25, a portion of F-141, west of the Souhegan River, F-142 through F-146, inclusive F-158, F-159 and F-161, a portion of F-163 south of a line from the southeast corner of 164 to the southwest corner of 162, and F-165 through F-173 (inclusive). *(Amended March 2001, March 2010)*

c. Lots D-92and D-94. *(Amended March 2010)*

d. Lots J-104-1, J-104-2 and J-105. *(Amended March 2010)*

e. The area south of Main Street and north of the Souhegan River. As delineated on the Town of Wilton Tax Map this includes Lots J-49, K-158 through K-162 (inclusive), portions of K-165 and K-166 east of a line drawn due south from the southeast corner of lot 103 to the river, K-167 through K-169 (inclusive) and K-174.. *(Amended March 2001, March 2010)*

f. The area south of the Souhegan River and north of NH Route 101. As delineated on the Town of Wilton Tax Map this includes Lots J-110, J-113 and L-64 through L-66 (inclusive) and lot L-68. *(Amended March 2001, March 2010)*

8.1 ***Permitted Uses.***

A building or structure may be erected, altered or used, and a lot may be used or occupied for any of the following purposes, provided the use meets the performance standards of this ordinance:

a. Light Manufacturing, as that term is defined in Section 9A.2.2 of this ordinance;

b. research and/or testing laboratory;

c. offices; and

d. non-residential commercial uses subject to all the requirements of this Industrial District ordinance . *(Amended March 2020)*

8.2 ***Lot Requirements.***

All new construction or development within the industrial district shall meet the following requirements.

8.2.1 Area. Two (2) acres of land excluding wetlands, water bodies, and land contained within the one hundred (100) year floodplain. *(Amended March 1992, March 2004)*

8.2.2 Frontage. Two hundred (200) feet on a Class V or better road.

8.2.3 Lot Coverage. A maximum of sixty percent (60%) of the gross area of any lot shall be occupied by buildings, parking and roadways. Total lot impervious coverage (buildings, parking area and roads) shall be forty (40) percent within the Aquifer Protection District. Industrial buildings, structures and parking areas in existence as of March 13, 1990 that exceed the permitted lot coverage within the district may be maintained at or rebuilt to the existing level. Any increase in impervious area will not be permitted. *(Amended March 1992)*

8.2.4 Setbacks. The setbacks within this district shall not be:
(Amended March 1991)

a. Less than one-hundred (100) feet from the edge of the public right-of-way for NH Route 101;

b. Less than seventy-five (75) feet from the edge of the public right-of-way for all other public roads;

c. Less than thirty-five (35) feet from side and rear lot lines.

d. No buildings or parking areas are permitted within the front setback or in any setback which abuts a residentially or residential/agriculturally zoned parcel. *(Amended March 1991)*

e. Parking areas are permitted up to within ten (10) feet of the side or rear lot line of an industrially zoned parcel where it abuts another commercially or industrially zoned parcel. *(Amended March 1991)*

f. Parking areas shared between two adjacent industrially or commercially zoned parcels may be developed up to the common side or rear lot-line if all other conditions of the district are met. *(Amended March 1991)*

8.2.5 Buffer Zones. Buffer zones shall be provided between industrial establishments and surrounding uses as follows:

a. Any lot bordering an area zoned for residential use or an area containing residential uses shall have a landscaped buffer between any building or parking area and the residential zone or use. *(Amended March 1991)*

b. All setbacks from public roads shall be sufficiently landscaped with trees and shrubs, an earth berm and/or fencing as to maintain a visual buffer between the highway and any building or parking area. *(Amended March 1991)*

8.2.6 Structure Height. Maximum structure height is forty-five (45) feet or two (2) stories.

8.2.7 Parking. Off-street parking facilities shall be provided following the standards established in the Site Plan Review Regulations.

8.2.8 Access. Any lot with frontage on NH Route 101 shall be accessed by any other street or side road available and not by NH Route 101 unless no other alternative exists. If no other access is available, entrance and exit for such lot(s) shall be limited to one (1) curb cut on NH Route 101 for each lot-of-record existing as of March 8, 1988. If access to a lot is available by a street or side road other than NH Route 101, access to the lot shall be taken from the street or side road. As each lot is developed within this district, provision shall be made during the Site Plan Review process for the lay-out and construction of streets or side roads as the Planning Board shall determine necessary to permit travel between adjacent lots without accessing NH Route 101. To encourage shared lot access, where at all possible and practical, the location of all accessory street or roadway curb cuts shall be situated to allow adjacent lots to also take advantage of or share the same point of access along the street or roadway. Access to any Town road or State highway shall require Town or State permit approval.

8.3 Conditions for Use of Area Water Supply.

8.3.1 Public Water Supply. Industrial establishments intending to be served by the public water supply system shall be reviewed by the Planning Board to ensure that the proposed use would not require more than ten percent (10%) of the available capacity as determined by the system's current safe yield and average daily water usage at the time of the proposed development. In any circumstance, where the Town of Wilton may require professional assistance or additional information to make a determination of compliance, the developer shall be required to pay the costs associated with obtaining this assistance.

8.3.2 On-site Water Supply. In areas not served by the public water system, industries shall obtain their own water supply. In cases where industries will be utilizing a private well to supply adequate water for manufacturing and employee use, the following performance standards shall be applied in an effort to avoid depletion of water supplies for neighboring uses:

a. In areas determined by the United States Geological Survey (U.S.G.S) as having a high potential to yield water, proposed uses may utilize a maximum of four thousand (4,000) gallons per day, (GPD) of groundwater from a drilled well.

b. In areas determined by the U.S.G.S. as having a medium potential to yield water, proposed uses may utilize a maximum of two thousand (2,000) GPD of groundwater from a drilled well.

c. In areas determined by the U.S.G.S. as having a low potential to yield water, proposed uses may utilize a maximum of one thousand (1,000) GPD of groundwater from a drilled well.

d. In areas determined by the U.S.G.S. as generally yielding enough water for domestic supplies, proposed industrial uses shall be limited to a maximum of seven hundred-fifty (750) GPD of groundwater from a drilled well.

The developer may conduct additional hydrogeological studies of the site to determine the actual location and extent of the groundwater, the capacity for groundwater supplies and the impacts on surrounding groundwater users at his own cost. The Planning Board may modify the above limits based on the results of the hydrogeological testing and the determination that sustained use of the water supply will not unreasonably reduce the water supply to adjacent users.

8.4 ***Traffic Generation.***

Industrial uses shall be permitted to generate traffic in keeping with the character of the roadway from which the use has access and egress, according to the following schedule:

Street Access	***Allowed Trip Generation per Acre***
Class IV and Class V Roads	0 - 10 Average Daily trips
Class I and Class II Roads	0 - 150 Average Daily Trips

8.5 ***Prohibited Uses.***

Neither residential uses nor Heavy Manufacturing, as that term is defined in Section 9A.2.1 of this ordinance, is permitted in the Industrial District. *(Amended March 2020)*

8.6 ***Special Exceptions.***

(See also section 4.4)

8.6.1 Lots of Record. In the event that a lot-of-record existing as of March 8, 1988 cannot satisfy the minimum lot or buffer requirements set forth in section 8.2 because of its configuration, the Zoning Board may permit a reduction in these requirements (except for section 8.2.3, Lot Coverage) by special exception. The permitted reduction in the requirement the lot-of-record cannot meet in these circumstances is designed to permit a proposed use in accordance with the objectives and purpose of this district.

9.0 OFFICE PARK DISTRICT

(Amended March 1999)

The purpose of this District is to attract corporate office, research activities in a college-campus like environment which will be achieved through zoning and land use regulations, limited types of uses, large open spaces, increased setback requirements and compatible architectural and landscape standards. All primary and accessory buildings must be sited to blend with the environment with a minimum amount of change to the existing vegetation and topography.

9.1 District Location.

(Amended March 1999)

The Office Park District encompasses the following area within the Town of Wilton: *(Amended March 2010)*

a. As delineated by the Town of Wilton Tax Map (C), this includes lots C-127, C-127-1.

9.2 Permitted Uses.

A building may be erected, altered or used and a lot may be used or occupied for any of the following purposes and in accordance with the following provisions:

a. Corporate offices;

b. Research facilities; and

c. Farming uses.

9.3 Lot Requirements.

(Amended March 1999)

9.3.1 *Area*. The minimum lot size is five (5) acres with a minimum of two (2) acres, excluding wetland and water bodies. *(Amended March 1992, March 2020)*

9.3.2 *Frontage*. Two hundred (200) feet on a Class V or better road. *(Amended March 1999)*

9.3.3 *Setbacks*. The setback shall be two-hundred (200) feet from all lot lines. Individual front lot setback of at least one-hundred (100) feet with side and rear setbacks of fifty (50) feet.

9.3.4 *Structure Height*. Two (2) stories with a maximum height above mean lot terrain of thirty-five (35) feet.

9.3.5 *Building Size*. Maximum of forty-thousand (40,000) square feet gross floor area on the ground floor, cumulative of all building and parking areas on the lot. *(Amended March 1999)*

9.3.6 *Access*. Ingress and egress shall only be from one (1) access road leading to a State Highway.

9.3.7 *Off-Street Parking Requirements*. One parking space for each one and two-tenths (1.2) employees based upon the highest expected employee occupancy.

9.3.8 *Conservation Zone*. All land within one hundred (100) feet of Blood Brook shall be retained in its natural state except for foot trails.

9.4 ***Architectural Design***.

(Recodified/Amended March 1999)

As a condition of granting final site plan approval for a development upon a lot in this District, the lot owner shall obtain Planning Board approval of the exterior architectural design of such structures. In connection therewith, the Planning Board shall require the lot owner to provide it with graphic renderings, photographs or three-dimensional models to depict the proposed development. In undertaking its review and approval, the Planning Board shall consider the location, alignment, and spacing of new buildings in relation to existing and future development of adjoining lots. In addition, the Planning Board shall consider the positioning and configuration of the proposed buildings on a lot or lots, the use of required setbacks, open space and buffer mechanisms and the lot owner's campus type layout and buildings requirements.

9.5 ***Open Space Design***.

(Recodified/Amended March 1999)

To encourage open space development in a manner that allows greater open spaces the following provisions may be applied. The intent of this section is to allow greater flexibility in this district while encouraging the retention of the area's rural character.

1. Side and rear setbacks (excluding lot lines tangent to Section 9.3.8 Conservation Zone and Section 6.0 General Residence and Agricultural District) may be reduced to 50 feet to promote clustered non-residential development(s).

2. Shared parking facilities will not be counted toward the percentage of lot coverage.

3. Parking areas shared between two adjacent lots within this district may be developed up to the common side or rear lot-line (excluding lot lines tangent to the 9.3.8 Conservation Zone and Section 6.0 General Residence and Agricultural District) if all other conditions of the district are met.

9A.0 RESEARCH AND OFFICE PARK DISTRICT

(Adopted March 2002)

9A.1 Purpose.

The Research and Office Park District is an overlay district that allows research and development and related uses in rural parts of the Town where they would not otherwise be permitted. The purpose of the district is to:

a. Encourage activities in a campus-like setting which will be both an aesthetic and an economic asset to the Town;

b. Attract research, office, and light manufacturing activities which do not need to be centrally located in an industrial district, and whose developers prefer a rural setting;

c. Preclude possible adverse effects on the local neighborhood and rural environment through a combination of very large lot sizes, low densities, rigorous performance standards, restricted traffic and tractor-trailer volumes, and aesthetic standards; and

de. Preserve the natural and rural environments through the reservation of the majority of the area of developed lots as agricultural or conservation land.

Regulations and standards have been established to protect the residential and/or agricultural character of the district and are reasonable in exchange for the privilege of a Research and Office Park that would otherwise not be permitted in this district.

9A.1.1 Overlay District Principles. The Research and Office Park District is an overlay district that shall be used along with underlying zoning districts, as established in this ordinance. This district establishes special development standards and guidelines beyond those of the underlying zoning designation for the development of Research and Office Parks. The standards established in this Section shall only apply to Research and Office Parks with an approved Research and Office Park Plan, as described herein. If a development is not a Research and Office Park and a Research and Office Park Plan has not been approved, the standards of the underlying zoning district shall apply. Lots that are included in the Research and Office Park District but are not part of a Research and Office Park may be developed or used in any manner consistent with their underlying zoning district.

9A.2 Definitions.

9A.2.1 Heavy Manufacturing. Any manufacture, processing, conversion or compounding (any of which, "manufacturing") of extracted or raw materials, including chemicals (or products composed primarily from unprocessed raw materials or chemicals) to create products, or manufacturing that might reasonably be expected to have any adverse impact on surrounding land uses or property values or beyond Town borders. Heavy Manufacturing includes, without limitation, (a) manufacturing products using (1) chemical processes or (2) petroleum, petrochemicals, or products derived therefrom, or that otherwise involve processing, refining or storing petroleum or petrochemicals (other than reasonable amounts to be used solely as fuel); and (b) the production or storage of explosives or ammunition (except retail sales of ammunition incident to another permitted use). *(Amended March 2020)*

9A.2.2 Light Manufacturing. The manufacture, predominantly from previously prepared materials, of finished products or parts, including processing, fabrication, assembly, treatment and packaging of such products, and incidental storage, sales and distribution of such products, but excluding raw materials industrial processing and Heavy Manufacturing. These activities do not necessitate the storage of large volumes of hazardous, flammable, toxic matter or explosive materials needed for the manufacturing process. These activities do not include manufacturing processes using predominantly hazardous, flammable, toxic or explosive materials. *(Amended March 2020)*

9A.2.3 Lot Coverage. A measure of intensity of land use that represents the portion of a site that is impervious. This portion includes, but is not limited to, all areas covered by buildings, parking structures, driveways, roads, sidewalks and any area of concrete asphalt, but does not include buffered setback areas, lawns, recreational areas, or agricultural uses.

.

9A.2.4 Office. Administrative, executive, professional, research or similar organizations having only limited contact with the public, provided that no merchandise or merchandising services are sold on the premises, except such as are incidental or accessory to the principal permissible use.

9A.2.5 Principal Use. The primary use of any lot.

9A.2.6 Research Laboratory. Administrative, engineering, scientific research, design or experimentation organizations where product testing is an integral part of the operation and goods or products may be manufactured as necessary for testing, evaluation and test marketing.

9A.2.7 Research and Office Park. An area of minimum contiguous size, as specified by this ordinance, to be planned, developed, operated, and maintained according to a common Research and Office Park Plan as a single entity and containing one or more structures to accommodate principal uses or a combination of such uses, and appurtenant common areas and secondary uses.

9A.2.8 Research and Office Park Plan. A master land use plan that is intended to guide growth and development of a Research and Office Park over a number of years or in phases.

9A.2.9 Research and Development (R & D). A business that engages in research, or research and development, of innovative ideas in technology-intensive fields. Examples include, but is not limited to, laboratories, scientific, medical, chemical, applied physics, mechanical, electronic, biological, genetic or other similar experimental research, product development or testing facilities. Development and construction of prototypes may be associated with this use.

9A.2.10 Secondary Use. A structure or use that: (1) is subordinate in the area, extent, and purpose to the principal use; (2) contributes to the comfort, convenience or necessity of the principal use; and (3) is located on the same lot or Research and Office Park as the principal use.

9A.3 District Location.

The Research and Office Park District encompasses the following areas within the Town of Wilton: *(Amended March 2010)*

a. The area in southwestern Wilton located west of NH Route 31. As delineated on the Town of Wilton Tax Map, this includes lots E-21, E-22, E-24 through E-26 (inclusive), E-29 through E-32 (inclusive), E-35, E-36, G-4, G-23, G-24, G-26, G-28, G-29, G-36 and G-37.

b. The area in western Wilton bordering the Town of Temple south of NH Route 101. As delineated on the Town of Wilton Tax Map, this includes lots C-127, C-127-1, C-128-1 and C-128-3.

9A.4 Permitted Uses.

9A.4.1 Principal Uses.

A building or structure may be erected, altered or used, and a lot may be used or occupied for any of the following principal uses, provided the use meets the requirements of this ordinance.

a. Research and development uses.

b. Research laboratories.

c. Light manufacturing uses.

d. Office uses.

9A.4.2 Secondary Uses.

A building or structure may be erected, altered or used, and a lot may be used or occupied for any of the following secondary uses, provided the use meets the requirements of this ordinance and conforms to the definition of a secondary use.

a. Support services, solely for employees of principal uses and guests of Research and Office Park occupants, which meet the following minimum requirements.

    1. Support services shall be limited to child or senior day care centers, printing services, copy services, mailing and shipping services, office supplies, banks, meeting/conference rooms, eating establishments with no drive-through facilities and secretarial/office services.

    2. Support services shall not be visible from, have direct access to, or have signage visible from public streets. The limitation on signage visibility shall not pertain to inclusion of the names of support services firms on a directory sign listing occupants of a development in this district.

    3. Space occupied by support service firms may be provided in either of the following fashions:

(a) Space may be part of a multi-purpose building or as a part of a building principally occupied by a principal use allowed in this zone.

(b) Space may be in a building exclusively occupied by one or more support service firms. There shall be no more than one (1) two-acre lot devoted to this type of building for each seventy-five (75) acres within this zone.

4. No support services shall be allowed in a development in this zone until the total building floor space devoted to principal use exceeds fifty thousand (50,000) square feet.

5. At no time shall the total amount of gross floor area devoted to support services exceed ten percent (10%) of the gross floor area of all buildings in the development.

6. No building occupied in whole or in part by support services shall be less than six thousand (6,000) square feet in size.

b. Residential uses, solely for employees of principal uses and their families, that meet the following minimum requirements:

1. One (1) dwelling unit shall be permitted for every ten thousand (10,000) square feet of gross floor area of the principal use(s)

2. No dwelling unit shall be less than four hundred (400) square feet per occupant.

3. At no time shall the total amount of gross floor area devoted to residential uses exceed ten percent (10%) of the gross floor area of the principal use(s).

c. Residential uses already in existence within lots of a development may continue, which shall be counted against the minimum requirements of 9A.4.2.b.

d. Open space, agricultural, conservation and recreation uses, only as otherwise permitted in and subject to the conditions and restrictions applicable in the underlying zoning district.

9A.4.3 Prohibited Uses.

All uses not explicitly permitted in this Section shall be prohibited in the Research and Office Park District. Such uses shall include:

a. Terminals, including truck or bus terminals, and other distribution facilities.

b. Bulk storage of hazardous, flammable, toxic or explosive materials for the manufacturing process.

c. Heavy manufacturing.

d. Warehousing.

9A.5 ***Research and Office Park Lot Requirements.***

All Research and Office Parks within the Research and Office Park District shall meet the following requirements.

9A.5.1 Area. A Research and Office Park shall be at least twenty-five (25) acres. No building within a Research and Office Park shall be constructed on any lot less than one (1) acre.

9A.5.2 Frontage. The Research and Office Park shall have four hundred (400) feet of combined contiguous frontage on the Class V or better road from which the development receives its primary access.

9A.5.3 Setbacks.

a. The setback for all buildings, structures and parking areas associated with the Research and Office Park and roadways other than the Research and Office Park's primary access road shall not be less than two hundred (200) feet from all lots that are not part of the Research and Office Park and from all public rights-of-way. This setback may be reduced to fifty (50) feet from lots in the Commercial and Industrial Districts, from lots belonging to other Research and Office Parks, or from lots whose owners consent in writing to such reduced setbacks.

b. The setback for all buildings, structures and parking areas associated with the Research and Office Park shall not be less than twenty (20) feet from all boundaries of the lot on which it is located.

9A.5.4 Lot Coverage. Total lot coverage of a Research and Office Park shall not exceed twenty percent (20%). Total lot coverage may be increased to twenty-five percent (25%) if the total area of the Research and Office Park is from fifty (50) to one hundred (100) acres, and to thirty-five (35) percent if the total area of the Research and Office Park size is one hundred (100) acres or greater.

9A.5.5 Undeveloped Land. At least fifty percent (50%) of the total development area shall be maintained in agriculture, as conservation land, or in a natural vegetated condition.

9A.5.6 Access. There shall be one (1) primary access road leading to the development. The primary access road shall be located on NH Route 101 or NH Route 31. The primary access road may be located on a Class V or better road if: (1) the property owner(s) of the Research and Office Park is the sole owner of the entire length of frontage along that road from NH Route 101 or NH Route 31 to the access road; and (2) new traffic attributed to that Research and Office Park primarily utilizes this primary access road. One (1) additional access road located on a Class V or better road may be created for emergency purposes. Existing structures in the Research and Office Park with existing access roads may retain these roads in addition to the one (1) primary access road.

9A.5.7 Structure Height. Maximum structure height is forty-five (45) feet or three (3) stories subject to Planning Board review in accordance with the Research and Office Park Regulations and the impact of the structure height on abutters to the Research and Office Park and the natural and rural environments.

9A.5.8 Traffic. Traffic shall not significantly increase on any road other than the primary access road as a result of a Research and Office Park. Each Research and Office Park shall be permitted to generate traffic in keeping with the character of the roadway from which the use has access and egress, according to the following schedule. For the purposes of this ordinance, each entering into or exiting from the Research and Office Park onto a public road shall be counted as a trip.

Street Access	***Maximum Allowed Trip Generation Per Square Feet of Gross Floor Area***
NH Route 101 and NH Route 31	24/1,000 SF
All Other Class V or Better Roads	12/1,000 SF

9A.5.9 Tractor-Trailer Volume. No more than two (2) tractor-trailer trips per up to 20,000 square feet of gross floor area shall be permitted per day within a Research and Office Park. An additional two (2) tractor trailer trips shall be permitted per day for each additional 20,000 square feet of gross floor area within the Research and Office Park. For the purposes of this ordinance, each entering into or exiting from the Research and Office Park onto a public road shall be counted as a trip. No tractor-trailer shall be parked in a Research and Office Park longer than three (3) days.

9A.5.10 Parking. Off-street parking shall be provided following the standards established in the Research and Office Park Regulations.

9A.5.11 Signs. Signs shall be provided according to the standards established in Section 16.0 of this ordinance and the Research and Office Park Regulations.

9A.5.12 Building Size. The footprint of any building in a Research and Office Park shall not be greater than 20,000 square feet.

9A.6 Conditions for Use of Area Water Supply.

9A.6.1 Public Water Supply. Research and Office Parks intending to be served by the public water supply system shall be reviewed by the Planning Board to ensure that the proposed developments would not require more than ten percent (10%) of the available capacity as determined by the system's current safe yield and average daily water usage at the time of the proposed development. In any circumstance, where the Town of Wilton may require professional assistance or additional information to make a determination of compliance, the developer shall be required to pay the costs associated with obtaining this assistance.

9A.6.2 On-site Water Supply. In areas not served by the public water system, Research and Office Parks shall obtain their own water supply. In cases where Research and Office Parks will be utilizing private wells to supply adequate water for the uses within the development, the following performance standards shall be applied in an effort to avoid depletion of water supplies for neighboring uses:

a. In areas determined by the United States Geological Survey (U.S.G.S) as having a high potential to yield water, proposed uses may utilize a maximum of four thousand (4,000) gallons per day (GPD) of groundwater from a drilled well.

b. In areas determined by the U.S.G.S. as having a medium potential to yield water, proposed uses may utilize a maximum of two thousand (2,000) GPD of groundwater from a drilled well.

c. In areas determined by the U.S.G.S. as having a low potential to yield water, proposed uses may utilize a maximum of one thousand (1,000) GPD of groundwater from a drilled well.

e. In areas determined by the U.S.G.S. as generally yielding enough water for domestic supplies, proposed industrial uses shall be limited to a maximum of seven hundred-fifty (750) GPD of groundwater from a drilled well.

The developer may conduct additional hydrogeological studies of the site to determine the actual location and extent of the groundwater, the capacity for groundwater supplies and the impacts on surrounding groundwater users at his own cost. The Planning Board may modify the above limits based on the results of the hydrogeological testing and the determination that sustained use of the water supply will not unreasonably reduce the water supply to adjacent users.

9A.7 ***Performance Standards***.

9A.7.1 The performance standards in Section 4.6 of this ordinance shall apply to any Research and Office Park as a whole rather than to individual lots within the development.

9A.7.2 It shall be unlawful to create, permit, allow, or maintain a noise disturbance in the Research and Office Park District. Any and all excessively annoying, loud or unusual noises or vibrations such as offend the peace and quiet of persons of ordinary sensibilities and which interfere with the comfortable enjoyment of life or property and affect at the same time an entire neighborhood or any considerable number of persons shall be considered a noise disturbance.

9A.7.3 No outdoor storage of any material (usable or waste) shall be permitted in the Research and Office Park District, except in outdoor storage containers. Storage containers shall be screened from public view by appropriate means, such as fencing, natural buffers or as otherwise approved by the Planning Board.

9A.7.4 No lighting shall be permitted that would cause glare from a Research and Office Park onto any street, road, highway, deeded right-of-way or into any abutting property. All luminaries and lamps shall be of fully shielded design and shall not emit any direct light above a horizontal plane passing through the lowest part of the light emitting portion of the luminary or lamp.

9A.8 ***Procedures.***

This Section is an innovative land use control as authorized by RSA 674:16, II. In accordance with RSA 674:21, II, the Wilton Planning Board is designated as the administrator of uses under this section. Before approving any developments under this Section, the Planning Board shall develop Research and Office Park Regulations that shall incorporate the standards of this Section, and any additional requirements that the Planning Board finds necessary or desirable to achieve the purposes of this Section.

9A.8.1 Approval Procedures.

a. Elements of Approval Process. The approval process for a Research and Office Park shall include the following two elements:

1. Approval of a Research and Office Park Plan including all lots, buildings, and uses to be incorporated in the overall development. The Research and Office Park Plan shall serve as the master land use plan for the Research and Office Park. A Research and Office Park Plan shall be approved in accordance with the provisions of the Research and Office Park Regulations. Any changes or amendments to an approved Research and Office Park Plan shall require approval of the Planning Board.

2. Approval of a site plan for the development of any nonresidential uses, multi-family dwellings containing three (3) or more dwelling units, changes or expansions of use and any additions or alterations that change the outward appearance of a nonresidential building within the Research and Office Park. A site plan shall be approved in accordance with the provisions of the Site Plan Review Regulations. If a Research and Office Park is to be developed in phases, site plans shall be required for each phase, and separate hearings shall be held to review each site plan.

An applicant may submit and the Planning Board may approve both of these elements concurrently.

b. Architectural Design and Compatibility with the Neighborhood. Planning Board approval of a Research and Office Park Plan shall include the review of the exterior architectural design of all structures in the Research and Office Park in accordance with the Research and Office Park Regulations. Such review shall be considered as an element of the Research and Office Park Plan. Such review shall ensure that the Research and Office Park does not negatively affect the natural and rural environments and conforms to the purposes outlined in the Section 9A.1 of this ordinance. The Research and Office Park Plan shall include graphic renderings, photographs or three-dimensional models to depict the proposed development. In undertaking its review and approval, the Planning Board shall consider the location, alignment, and spacing of new buildings in relation to existing and proposed future buildings in the development. In addition, the Planning Board shall consider the positioning and configuration of the proposed buildings on a lot or lots, the use of required setbacks, open space and buffer mechanisms and the overall campus type layout of the development.

c. Subsequent subdivision or consolidation of lots within a Research and Office Park shall be permissible according to the same rules applicable to subdivisions elsewhere in the Town, but no lot or portion thereof shall be removed from or added to the Research and Office Park without Planning Board approval of an amendment to the original Research and Office Park Plan.

d. Buffers. Buffers shall ensure that the Research and Office Park has no significant visual impact on abutting uses and protects the natural and rural environments. The natural vegetative state shall be the preferred type of buffer for any Research and Office Park.

9A.8.2 Suspension or Revocation of Research and Office Park Plan Approval

The Planning Board shall have the authority to suspend or revoke any approval granted under this section for violation of any condition of the approval, including violations of Section 9A.7 of this ordinance, which shall be implicitly incorporated in the terms of all approvals under this Section. Any such suspension or revocation must be in accordance with the procedures of RSA 676:4–a.

9B.0 GRAVEL EXCAVATION DISTRICT

(Adopted March 2006)

9B.1 Purpose

The purpose of this district is to provide reasonable and substantial opportunities for the extraction of earth materials while maintaining a safe, healthy, and harmonious atmosphere for all in the Town of Wilton. To this end, a large area of the town which is known to contain large deposits of easily extractable gravel, and where many of the lots have been used for gravel excavation in the past, is designated to allow the removal of earth materials.

The designated area permits excavation without significant impact to the public welfare because it is in a rural, sparsely populated part of the town, with convenient access to a state highway. The topography of the area, substantial buffer requirements, and the limitation on maximum open excavation areas minimize the detrimental effect of excavations on the visual character of the scenic Souhegan River / Greenville Road valley.

9B.2 District Location

The Gravel Excavation District encompasses the following areas within the Town of Wilton: *(Amended March 2010)*

a. As delineated on the Town of Wilton Tax Map, the district includes Lots 21, 22, 24, 25, 26, 29, 30, 31, 32, and 36 on Tax Map E, and Lots 23 and 24 on Tax Map G. These lots fall in an area in southwestern Wilton located west of NH Route 31 (Greenville Road), east of Russell Hill Road and Kimball Hill Road, south of NH Route 101, and north of King Brook Road.

9B.3 Permitted Uses

The Gravel Excavation District is an overlay district. Uses permitted in this district are in addition to uses permitted in the underlying zoning districts.

Lots in the Gravel Excavation District may be used for the commercial taking of sod, loam, clay, sand, gravel, or such other naturally occurring unconsolidated materials that normally mask the bedrock, provided that the use meets the requirements of this ordinance and of the Excavation Site Plan Review Regulations established by the Wilton Planning Board. Washing, screening, and crushing of extracted materials utilizing small portable equipment is permitted, accessory to the extraction of those materials from the site.

9B.4 Prohibited Uses

Quarrying, excluding activities regulated under NH Revised Statutes Annotated (RSA), Chapter 12-E, Mining and Excavation, or crushing of bedrock, excavation of materials with explosives, or any other mining activity is prohibited. Stationary manufacturing plants are prohibited.

9B.5 Nonconforming Uses

Nothing in this chapter shall be deemed to prohibit any excavation which is exempted from local permit requirements by N.H. RSA 155–E.

Existing excavations operating under a permit previously granted by the Wilton Planning Board may continue to operate under the terms of that permit.

9B.6 ***Requirements and Performance Standards***

The standards of this section are in addition to any standards established in the *Excavation Site Plan Review Regulations* established by the Wilton Planning Board. Section 12.4(i) of this Ordinance establishes additional standards for excavations in the Wellhead Protection Area. Where there is a conflict between the provisions of this section, Section 12.4(i), and the *Excavation Site Plan Review Regulations*, the stricter standard shall rule. *(Amended March 2007)*

9B.6.1 Setbacks and Buffers

All areas used for the excavation of earth materials shall be set back and separated by an undisturbed natural wooded buffer at least three-hundred (300) feet from all public roads except Webb Road and from all lot lines, except that:

a. The setback may be reduced to twenty-five (25) feet from other lots in the Gravel Excavation District with the written permission of the lot owner.

b. There is no setback requirement from lot lines between multiple lots containing land encompassed in a single excavation.

c. Access roads may be constructed through the buffer area.

9B.6.2 Transportation

The transportation of earth materials removed from this district must be by a private access road to NH Route 31 (Greenville Road) or King Brook Road from NH Route 31 (Greenville Road) to Photon Way, subject to the Planning Board finding that such use does not compromise public safety, and not to any other public road. Where materials are proposed to be removed from a lot without frontage on NH Route 31 (Greenville Road) or King Brook Road, it is the responsibility of the excavator to obtain any necessary easements to construct an access road to NH Route 31 (Greenville Road).

9B.6.3 Maximum Open Area

a. No actual excavation may exceed five (5) acres at one time.

b. The Planning Board may incorporate specific conditions in the *Excavation Site Plan Review Regulations* establishing conditions under which it may permit the extension of the maximum open excavation area to ten (10) acres.

9B.6.4 Reclamation

a. No slope in soil material shall be left steeper than 3 to 1 (three (3) horizontal feet for each one (1) foot of vertical drop). The Planning Board may approve a reclamation plan incorporating 2 to 1 slopes (two (2) horizontal feet for each one (1) foot of vertical drop) provided all of the following conditions are met:

   1. The steeper grade of 2 to 1 must be stable and must be able to support adequate forest growth;

   2. Reforestation of the 2 to 1 slope area with native tree species consistent with forestry best management practices (BMP) utilizing seedlings or young trees;

3. Acceptable soil erosion and drainage control measures must be incorporated to stabilize the reclaimed area, according to best management practices (BMP), including but not limited to elevation platforms or benches at appropriate elevation intervals.

b. All topsoil removed during the excavation shall be stockpiled on site, and shall be spread over the site during the reclamation of the excavated area or any portion thereof. Additional topsoil shall be brought from off-site, as required, to provide a minimum depth of four (4) inches. The excavator may apply to the Planning Board for permission to remove a portion of the stockpiled topsoil from the site, subject to a determination that the remaining material will be sufficient to cover the reclaimed area to a minimum depth of six (6) inches.

10.0 FLOODPLAIN CONSERVATION DISTRICT

The regulations in the Town of Wilton Zoning Ordinance shall be considered part of the zoning Ordinance for purposes of administration and appeals under state law. If any provision of this ordinance differs or appears to conflict with any provision of the zoning Ordinance or other ordinance or regulation, the provision imposing the greater restriction or more stringent standard shall be controlling.

The following regulations shall apply to all lands designated as special flood hazard areas by the Federal Emergency Management Agency (FEMA) in its "Flood Insurance Study for the County of Hillsborough, N.H." dated September 25, 2009 or as amended, together with the associated Flood Insurance Rate Maps (FIRM) dated September 25, 2009 or as amended, which are declared to be a part of this ordinance and are hereby incorporated by reference. (*Amended May, 2009 by Selectmen's Resolution)*

10.1 Definitions.

The following definitions shall apply only to this Floodplain Development Ordinance and shall not be affected by the provisions of any other ordinance of the Town of Wilton.

10.1.1 *(Deleted)*

10.1.2 Area of Special Flood Hazard. The land in the flood plain within the Town of Wilton subject to a 1 percent or greater chance of flooding in any given year. The area is designated as *Zones A or AE* on the Flood Insurance Rate Map. *(Amended March 2007)*

10.1.3 Base Flood. The flood level having a one-percent possibility of being equaled or exceeded in any given year.

10.1.4 Basement. Any area of a building having its floor subgrade on all sides.

10.1.5 Building. See "structure".

10.1.6 Breakaway Wall. A wall that is not part of the structural support of the building and is intended through its design and construction to collapse under specific lateral loading forces without causing damage to the elevated portion of the building or supporting foundation.

10.1.7 Development. Any man-made change to improved or unimproved real estate, including but not limited to buildings or other structures, mining, dredging, filling, grading, paving, excavation or drilling operations or storage of equipment or materials. *(Amended March 2007)*

10.1.8 FEMA. Federal Emergency Management Agency.

10.1.9 Flood or Flooding. A general and temporary condition of partial or complete inundation of normally dry land areas from:

a. The overflow of inland or tidal waters; and/or

b. The unusual and rapid accumulation or runoff of surface waters from any source.

10.1.10 *(Deleted March 2007)*

10.1.11 Flood Elevation Study. An examination, evaluation and determination of flood hazards and if appropriate, corresponding water surface elevations, or an examination and determination of mud slide or flood related erosion hazards

10.1.12 Flood Insurance Rate Map (FIRM). An official map incorporated with this ordinance on which FEMA has delineated both the special flood hazard areas and the risk premium zones applicable to the Town of Wilton. The FIRM will be used to make determinations of flood hazard zones and base flood elevations.

10.1.13 Flood Insurance Study. See "Flood elevation study".

10.1.14 Floodplain or Flood-prone area. Any land area susceptible to being inundated by water from any source (see "Flooding").

10.1.15 Flood proofing. Any combination of structural and non-structural additions, changes, or adjustments to structures which reduce or eliminate flood damage to real estate or improved real property, water and sanitation facilities, structures and their contents.

10.1.16 Floodway. see "Regulatory Floodway".

10.1.17 Functionally dependent use. A use which cannot perform its intended purpose unless it is located or carried out in close proximity to water. The term includes only docking and port facilities that are necessary for the loading/unloading of cargo or passengers, and ship building repair facilities but does not include long-term storage or related manufacturing facilities.

10.1.18 Highest adjacent grade. The highest natural elevation of the ground surface prior to construction next to the proposed walls of a structure.

10.1.19 Historic Structure. Any structure that is:

a. Listed individually in the National Register of Historic Places (a listing maintained by the Department of Interior) or preliminarily determined by the Secretary of the Interior as meeting the requirements for individual listing on the National Register;

b. Certified or preliminarily determined by the Secretary of the Interior as contributing to the historical significance of a registered historic district or a district preliminarily determined by the Secretary to qualify as a registered historic district;

c. Individually listed on a state inventory of historic places in states with historic preservation programs which have been approved by the Secretary of the Interior; or

d. Individually listed on a local inventory of historic places in communities with historic preservation programs that have been certified either;

    1. By an approved state program as determined by the Secretary of the Interior, or

    2. Directly by the Secretary of the Interior in states without approved programs.

10.1.20 Lowest Floor. The lowest floor of the lowest enclosed are (including basement). An unfinished or flood resistant enclosure, usable solely for parking of vehicles, building access or storage in an area other than a basement area is not considered a building's lowest floor; provided, that such an enclosure is not built so as to render the structure in violation of the applicable non-elevation design requirements of this ordinance.

10.1.21 Manufactured Home. A structure, transportable in one or more sections, which is built on a permanent chassis and is designed for use with or without a permanent foundation when connected to the required utilities. For floodplain management purposes the term "manufactured home" includes park trailers, travel trailers, and other similar vehicles placed on site for greater than 180 consecutive days. This includes manufactured homes located in a manufactured home park or subdivision. *(Amended March 2007)*

10.1.21.1 Manufactured Home Park or Subdivision. A parcel (or contiguous parcels) of land divided into two or more manufactured home lots for rent or sale. *(Adopted March 2007)*

10.1.22 Mean sea level. The National Geodetic Vertical Date (NGVD) of 1929 or other datum, to which base flood elevations shown on a community's FIRM are referenced.

10.1.22.1 New construction. For the purposes of determining insurance rates, structures for which the "start of construction" commenced on or after the effective date of an initial FIRM or after December 31, 1974, whichever is later, and includes any subsequent improvements to such structures. For floodplain management purposes, *new construction* means structures for which the *start of construction* commenced on or after the effective date of a floodplain management regulation adopted by a community and includes any subsequent improvements to such structures. *(Adopted March 2007)*

10.1.23 100-Year flood. See "base flood".

10.1.24 Recreational Vehicle. A vehicle which is (i) built on a single chassis; (ii) 400 square feet or less when measured at the largest horizontal projection; (iii)designed to be self propelled or permanently towable by a light duty truck; and (iv) designed primarily not for use as a permanent dwelling but as temporary living quarters for recreational, camping, travel or seasonal use. *(Amended March 1994)*

10.1.25 Regulatory Floodway. The channel of a river or other watercourse and the adjacent land areas that must be reserved in order to discharge the base flood without cumulatively increasing the water surface elevation more than a designated height. *(Amended March 2007)*

10.1.26 Special flood hazard area. See "Area of Special Flood Hazard."

10.1.27 Structure. For floodplain management purposes, a walled and roofed building, including a gas or liquid storage tank, that is principally above ground, as well as a manufactured home.

10.1.28 Start of Construction. The date the building permit was issued, provided the actual start of construction, repair, reconstruction, placement, or other improvement was within 180 days of the permit date. The actual start means either the first placement of permanent construction of a structure on site, such as the pouring of a slab or footings, the installation of piles, the construction of columns, or any work beyond the stage of excavation; the placement of a manufactured home on a foundation; or any substantial improvement. Permanent construction does not include land preparation, such as clearing, grading and filling; nor does it include the installation of streets and/or walkways; excavation for a basement, footings, piers, or

foundations; the erection of temporary forms; or the installation on the property of accessory buildings, such as garages or sheds not occupied as dwelling units or part of the main structure.

10.1.29 Substantial damage. Damage of any origin sustained by a structure whereby the cost of restoring the structure to its before damaged condition would equal or exceed 50 percent of the predamage market value of the structure.

10.1.30 Substantial Improvement. Any combination of repairs, reconstruction, alteration, or improvements to a structure in which the cumulative cost equals or exceeds fifty percent of the market value of the structure. The market value of the structure should equal: (1) the appraised value prior to the start of the initial repair or improvement, or (2) in the case of damage, the value of the structure prior to the damage. For the purposes of this definition, "substantial improvement" is considered to occur when the first alteration of any wall, ceiling, floor, or other structural part of the building commences, whether or not that alteration affects the external dimensions of the structure. This term includes structures which have incurred substantial damage, regardless of actual repair work performed. The term does not include any project for improvement of a structure required to comply with existing health, sanitary, or safety code specifications which are solely necessary to assure safe living conditions or any alteration of a "historic structure; provided that the alteration will not preclude the structure's continued designation as a "historic structure".

10.1.30.1 Violation. The failure of a structure or other development to be fully compliant with the community's flood plain management regulations. A structure or other development without the elevation certificate, other certifications, or other evidence of compliance required in 44CFR § 60.3(b)(5), (c)(4), (c)(10), (d)(3), (e)(2), (e)(4), or (e)(5) is presumed to be in violation until such time as that documentation is provided. *(Adopted March 2007)*

10.1.31 Water surface elevation. The height, in relation to the National Geodetic Vertical Datum (NGVD) of 1929, (or other datum, where specified) of floods of various magnitudes and frequencies in the floodplains.

10.2 Permit Required.

All proposed development in any special flood hazard area shall require a permit. The building inspector shall review all building permit applications for new construction or substantial improvements to determine whether proposed building sites will be reasonably safe from flooding.

The Building Inspector will not issue a building permit until the applicant certifies that all necessary permits have been received from those governmental agencies from which approval is required by federal or state law, including Section 404 of the Federal Water Pollution Control Act Amendments of 1972, 33 U.S.C. 1334. It shall be the responsibility of the applicant to certify these assurances to the Building Inspector.

In addition, the applicant shall supply the Building Inspector with the following information for all new or substantially improved structures:

a. The as-built elevation (in relation to NGVD) of the lowest floor (including the basement) and include whether or not the structure contains a basement;

b. If the structure has been floodproofed, the as-built elevation (in relation to NGVD) to which the structure was floodproofed; and

c. Any certification of floodproofing.

The Building Inspector shall maintain this information for public inspection and furnish it upon request.

10.3 ***Location of the 100-Year Flood Elevation.***

In special flood hazard areas the Building Inspector shall determine the 100-year flood elevation in the following order of precedence according to the data available:

a. In Zone AE, refer to the elevation data provided in the communities Flood Insurance Study and accompanying FIRM; *(Amended March 2007)*

b. In unnumbered A zones the Building Inspector shall obtain, review, and reasonably utilize any 100-year flood elevation data available from any federal, state, or other source including data submitted to the Town for development proposals (i.e. subdivisions, site approvals).

10.4 ***Construction Standards.***

a. All new construction or substantial improvements within a flood prone area shall be:

1. Designed (or modified) and adequately anchored to prevent flotation, collapse, or lateral movement of the structure resulting from hydrodynamic and hydrostatic loads, including the effects of buoyancy;

2. Constructed with materials resistant to flood damage;

3. Constructed by methods and practices that minimize flood damages; and

4. Constructed with electrical, heating, ventilation, plumbing, air conditioning equipment and other service facilities that are designed and/or located so as to prevent water from entering or accumulating within the components during conditions of flooding.

b. Any new construction or substantial improvement within the A and AE Zones shall meet the following criteria that: *(Amended March 2007)*

1. All new construction or substantial improvement of residential structures have the lowest floor (including the basement) elevated to or above the 100-year flood elevation;

2. All new construction or substantial improvement of non-residential structures have the lowest floor (including the basement) elevated to or above the 100-year flood level; or together with attendant utility and sanitary facilities, shall:

a) Be floodproofed so that below the 100-year flood elevation the structure is watertight will walls substantially impermeable to the passage of water;

b) Have structural components capable of resisting hydrostatic and hydrodynamic loads and the effects of buoyancy; and

c) Be certified by a registered professional engineer or architect that the design and methods of construction are in accordance with accepted standards of practice for meeting the provisions of this section;

c. All manufactured homes to be placed or substantially improved within special flood hazard areas shall be elevated on a permanent foundation such that the lowest floor of the manufactured home is at or above the base flood level and securely anchored to resist flotation, collapse, or lateral movement. Methods of anchoring may include, but are not limited to, use of over-the-top or frame ties to ground anchors. This requirement is in addition to applicable state and local anchoring requirements for resisting wind forces;

d. Recreational vehicles placed on sites within Zone AE shall either: (i) be on the site for fewer than 120 consecutive days; (ii) be fully licensed and ready for highway use; or (iii) meet all standards of Section 60.0 (b) (1) of the National Flood Insurance Program Regulations and the elevation and anchoring requirements for manufactured homes in Paragraph (c) (6) of Section 60.3. *(Amended March 2007)*

e. For all new construction and substantial improvements, fully enclosed areas below the lowest floor that are subject to flooding are permitted provided they meet the following requirements:

1. The enclosed area is unfinished or flood resistant, usable solely for the parking of vehicles, building access of storage;

2. The area is not a basement;

3. The area shall be designed to automatically equalize hydrostatic flood forces or exterior walls by allowing for the entry and exit of floodwaters. Designs for meeting this requirement must either be certified by a registered professional engineer or architect or meet or exceed the following minimum criteria:

a) A minimum of two openings having a total net area of not less than one square inch for every square foot of enclosed area subject to flooding shall be provided;

b) The bottom of all openings shall be no higher than one foot above grade; and

c) Openings may be equipped with screens, louvers, or other coverings or devices provided that they permit the automatic entry and exit of floodwaters; and

f. Where new or replacement water and sewer systems (including on-site systems) are proposed in floodprone areas the applicant shall provide the Building Inspector with assurance that these systems will be designed to minimize or eliminate infiltration of flood waters into the systems and discharges from the systems into flood waters, and that on-site waste disposal systems will be located to avoid impairment to them or contamination from them during periods of flooding.

10.5 ***Alteration of Water Courses.***

Any development involving the alteration of a watercourse shall meet the following requirements.

a. Prior to the alteration or relocation of a watercourse the applicant for such authorization shall notify the Wetlands Bureau of the New Hampshire Department of Environmental Services and submit copies of such notification to the Building Inspector, in addition to the copies required by RSA 482-A:3. Further, the applicant shall be required to submit copies of said notification to those adjacent communities as determined by the Building Inspector. *(Amended March 2007)*

b. The applicant shall submit to the Building Inspector, certification provided by a registered professional engineer, assuring that the flood carrying capacity of an altered or relocated watercourse can and will be maintained.

c. Along watercourses with a designated Regulatory Floodway no encroachments, including fill, new construction, substantial improvements, and other development are allowed within the floodway unless it has been demonstrated through hydrologic and hydraulic analyses performed in accordance with standard engineering practices that the proposed encroachment would not result in any increase in flood levels within the community during the base flood discharge. *(Amended March 2007)*

d. Until a Regulatory Floodway is designated along watercourses, no new construction, substantial improvements or other development (including fill) shall be permitted within Zone AE on the FIRM, unless it is demonstrated by the applicant that the cumulative effect of the proposed development, when combined with all existing and anticipated development, will not increase the water surface elevation of the base flood more than one foot at any point within the community. *(Amended March 2007)*

e. The Building Inspector shall obtain, review, and reasonably utilize any floodway data available from Federal, State, or other sources as criteria for requiring that all development located in Zone A meet the following floodway requirement:

   "No encroachments, including fill, new construction, substantial improvements, and other development are allowed within the floodway that would result in any increase in flood levels within the community during the base flood discharge." *(Adopted March 2007)*

10.6 ***Variances and Appeals.***

Any order, requirement, decision or determination of the Building Inspector made under this ordinance may be appealed to the Zoning Board of Adjustment as set forth in RSA 676:5.

If the applicant, upon appeal, requests a variance as authorized by RSA 674:33, I (b), in addition to the usual variance standards under state law the applicant shall show that:

a. The variance will not result in increased flood heights, additional threats to public safety or extraordinary public expense;

b. If the requested variance is for activity within a designated regulatory floodway, it will not result in any increase in flood levels during the base discharge; and

c. Considering flood hazard, the variance is necessary to afford relief.

The Zoning Board of Adjustment shall notify the applicant in writing that:

a. The issuance of a variance to construct below the base flood level will result in increased premium rates for flood insurance up to amounts as high as $25 for $100 of insurance coverage; and

b. Construction below the bases flood level increases risks to life and property.

The notification shall be maintained with a record of all variance actions.

The Town shall maintain a record of all variance actions, including the justification for their issuance, and report the issuance of any variance to the FEMA's Federal Insurance Administrator in its annual or biennial report.

11.0 WETLANDS CONSERVATION DISTRICT

11.1 Purpose.

In the interest of public health, convenience, safety and welfare, the regulations of this District are intended to guide the use of areas of land with extended periods of high water tables.

a. To prevent the development of structures and land uses on naturally occurring wetlands which would contribute to pollution of surface and groundwater by sewage.

b. To prevent the destruction of natural wetlands which provide flood protection.

c. To prevent unnecessary or excessive expenses to the Town to provide and maintain essential services and utilities which arise because of inharmonious use of wetlands.

d. To encourage those uses that can be appropriately and safely located in wetland areas.

11.2 District Boundaries.

The Wetlands Conservation District comprises all wetlands and water bodies, as defined by this ordinance, located wholly or partially within the Town of Wilton.

In all cases where the Wetland Conservation District is superimposed over another zoning district in the Town of Wilton, the more restrictive regulations shall apply.

(Amended March 2002, March 2003, March 2020)

11.3 Permitted Uses.

Any use that does not result in the erection of any structure or alter the surface configuration by the addition of fill or by dredging and that is otherwise permitted by the zoning ordinance.

a. Forestry - tree farming;

b. Agriculture;

c. Wildlife refuge;

d. Parks and such recreational uses as are consistent with the purpose and intentions of this section;

e. Conservation areas and nature trails;

f. Open spaces as permitted by subdivision regulations and other sections of this ordinance;

g. Natural drainage-ways, i.e. streams, creeks or other paths of normal run-off water; and
h. Water impoundments and wells for water supply.

11.4 ***Special Exceptions.***

Special exceptions may be granted by the Zoning Board of Adjustment (ZBA) for the following uses within the Wetland Conservation District (see also Section 4.4):

a. Streets, roads and other access ways and utility right-of-way easements including power lines and pipe lines if essential to the productive use of land not so zoned and if so located and constructed as to minimize any detrimental impact of such uses upon the wetlands or water bodies.

b. The undertaking of a use not otherwise permitted in the Wetland Conservation District, which may include the erection of a structure, dredging, filling, draining or otherwise altering the surface configuration of the land, if it can be shown that the proposed use will not conflict with the purpose and intent of this section and if the proposed use is otherwise permitted by the zoning ordinance. Proper evidence to this effect shall be submitted in writing to the Zoning Board of Appeals and shall be accompanied by the findings of a review by a soil scientist certified by the New Hampshire Board of Natural Scientists selected by the Planning Board and/or the Zoning Board of Adjustment. (Amended March 1999.)

c. *(Repealed March 2002)*

d. *(Repealed March 2002)*

e. Any exception granted by the ZBA must be preceded by a public hearing thirty (30) days before approval may be given. Abutters to affected property must be notified then (10) days in advance of the public hearing.

11.5 ***Incorrectly Designated Zones.***

(Adopted March 2002)

When the actual boundary of the Wetlands Conservation District is in dispute by any owner or abutter actually affected by the boundary, the Planning Board, at the owner/abutters expense and request, may engage a certified soil scientist or a certified wetlands scientist to determine more accurately the precise boundary of the Wetlands Conservation District, who shall submit to the Planning Board his findings.

The Planning Board, based upon the findings presented by the applicant, may adjust the boundary or area designation of the Wetlands Conservation District to reduce or expand the designated area to more correctly define the location and extent of the wetlands on a site-specific, case-by-case basis.

The Planning Board shall reserve the right to withhold action on the plat pending the results of an on-site and/or other investigation by the Board or its appointed agent and shall act to approve or disapprove the final plat within 65 days of submission or such further time as deemed necessary and as provided for by New Hampshire State statute as amended. *(Amended March 2018)*

11.6 ***(Deleted March 2020)***

12.0 AQUIFER PROTECTION DISTRICT

12.1 Purpose.

Pursuant to NH RSA 674:16 and 674:21, the Aquifer Protection District is hereby established for the purposes of protecting, preserving and maintaining the existing and future municipal water supply sources of the Town of Wilton by regulating the uses of land over known aquifers and their recharge areas, so as to protect such supplies from contamination caused by adverse or incompatible land use practices or developments. The Aquifer Protection Ordinance is intended to limit the uses of land so designated to those which will not adversely affect water quality by contamination, or water quantity by preventing recharge of the aquifer.

12.2 District Location.

The boundaries of the Aquifer Protection District shall be the outermost edge of the surficial extent of all aquifer deposits presently designated as stratified drift as supported by information included in the USGS Aquifer Delineation study entitled Hydrogeology of Stratified Drift Aquifers and Water Quality in the Nashua Regional Planning Commission Area, South-Central, New Hampshire by K. W. Toppin, (1987), extended to include the boundaries of the Wellhead Protection District described in the following section. The Aquifer Protection District is a zoning overlay district which imposes additional requirements and restrictions to those of the underlying, base district zoning. In all cases, the more restrictive requirement(s) and permitted uses shall apply.

Wellhead Protection Area. The boundaries of the Wellhead Protection Area (WHPA) are as delineated in "WHPA Delineation – Abbott and Everett Production Wells Wilton, NH" by Emery and Garrett Groundwater, Inc (EGGI), 2008. See Figure 12.1 below. The map in Figure 12.1 was produced by Nashua Regional Planning Commission (NRPC) utilizing electronic "shape files" provided by EGGI, and depicts the revised WHPA. The EGGI study has increased the WHPA that was delineated in "The Wilton, N.H. Wellhead Protection Pilot Project" by Douglas L. Heath, October 1993; from 304 acres to 396 acres.

The limits of the combined WHPA in Figure 12.1 below are not surveyed, and therefore are approximate. For planning purposes, the Planning Board may use the EGGI revised WHPA boundary depicted below or as presented in the EGGI report cited above. *(Amended March 2007, March 2009)*

Figure 12-1

Abbott & Everett Wellhead Protection Area Delineation, Wilton, NH

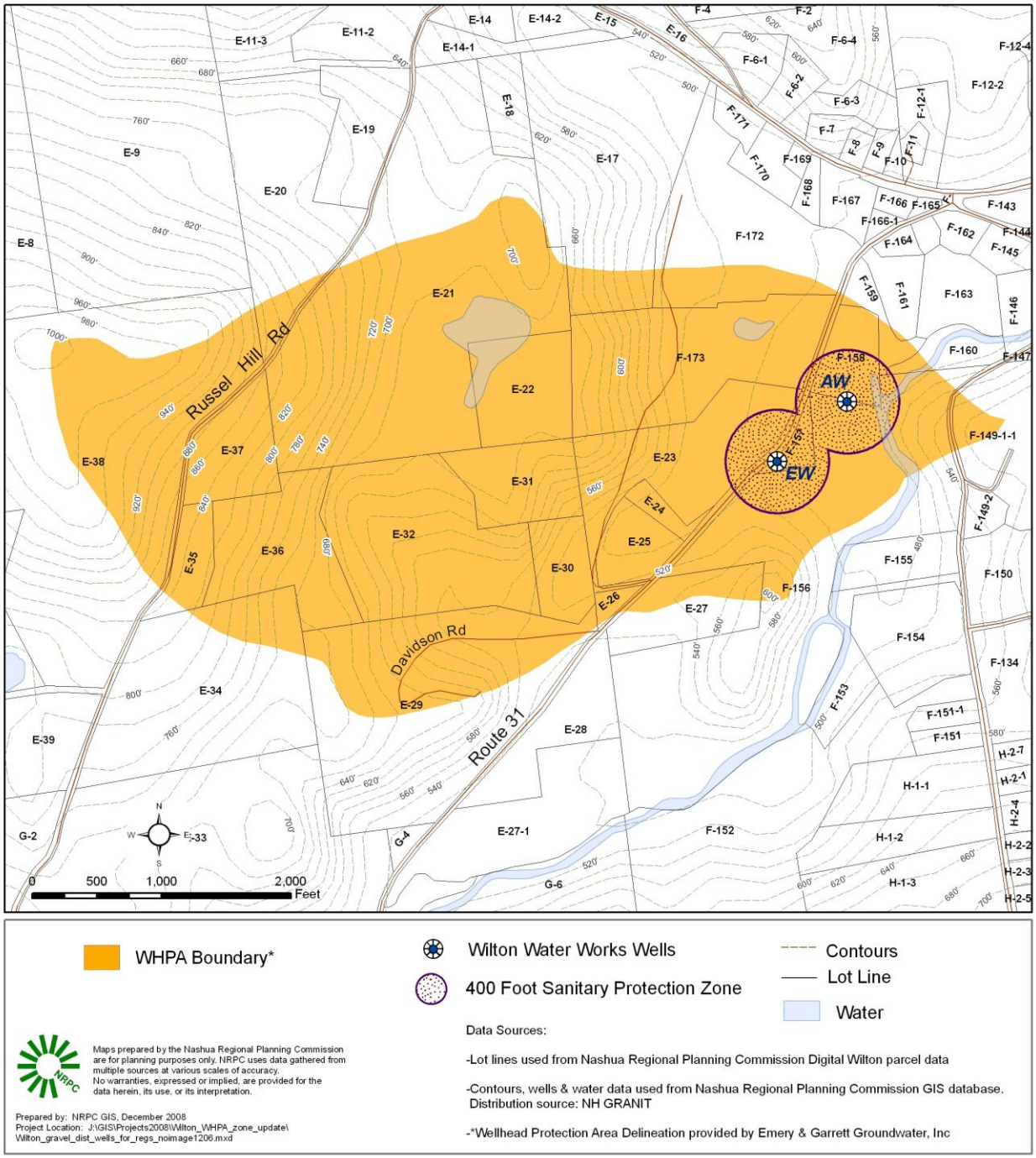

12.3 ***Permitted Uses.***

The following uses shall be permitted in this district:

a. Industrial or commercial uses, in the appropriate District, which discharge no non-human wastes on site and human wastes only in an approved septic systems;

b. Industrial uses that discharge only non-contact cooling water;

c. Residential development under the following conditions:

   1. If serviced by Town water and sewer, at densities permitted in the underlying district;

   2. If serviced by on-site water and/or sewer, at fifty (50) percent of the density of the underlying District (i.e. double the acreage requirement of the underlying District); however, this does not increase the minimum dry area requirement of the underlying District;

   3. If developed under the Alternative Lot Requirements set forth in Section 6.3, the area of the reduced frontage lot does not have to be increased;

   4. Areas located in the Watershed District at the density of the underlying district;

d. Activities designed for conservation of soil, water, plants, and wildlife;

e. Outdoor recreation, nature study, boating, fishing, and hunting where otherwise legally permitted;

f. Normal operation and maintenance of existing water bodies, wells, and dams, splash boards, weirs, and other water control, supply, and conservation devices;

g. Foot, bicycle, and/or horse paths and bridges;

h. Maintenance and repair of any existing structure; and

i. Farming, gardening, nursery, forestry, harvesting and grazing provided that fertilizers, herbicides, pesticides, manure, and other leachables are used appropriately and not stored outdoors in accordance with the following:

   1. The cultivation and harvesting of crops shall be performed in accordance with the recognized soil conservation practices of the Hillsborough County Conservation District and agricultural practices as may be regulated by the New Hampshire Department of Agriculture, the Division of Public Health Services of the Department of Health and Human Services, and the New Hampshire Water Supply and Pollution Control Division or as recommended by the Hillsborough County Extension Service;

   2. Forestry or tree farming shall be performed in accordance with recognized management practices in order to protect the aquifer from contamination or damage as may be regulated by the Division of Forests and Lands of the New Hampshire Department of Resources and Economic Development or recommended by the Hillsborough County Soil Conservation District and Extension Service.

j. Subsurface storage of propane/liquefied natural gas. *(Adopted March 2004)*

12.4 ***<u>Prohibited Uses</u>.***

The following uses shall not be permitted in the Aquifer Protection District:

a. Disposal of solid waste other than brush or stumps;

b. Subsurface storage of regulated substances, including gasoline, diesel fuel, oil and other refined petroleum products, and the subsurface transmission of regulated substances, including gasoline, diesel fuel, oil and other refined petroleum products through pipelines; *(Amended March 2004)*

c. Disposal of liquid or leachable non-human wastes;

d. Industrial or commercial uses which discharge contact type process waters on site; *(Amended March 2004)*;

e. Outside, unenclosed storage of road salt;

f. Dumping of snow containing de-icing chemicals brought from outside the Aquifer Protection District;

g. Commercial animal feed-lots where animals are kept at excessive densities;

h. Mining of land except incidental to a permitted use;

i. Excavation(s) of sand or gravel, except those conducted in accordance with an approved Excavation Permit issued pursuant to the Excavation Regulations of the Town. Within the Wellhead Protection Area (WHPA), excavations of sand and gravel are subject to the following additional restrictions: *(Amended March 2007)*

    1. Minimum depth to groundwater is ten (10) Feet.

    2. Crushing and or washing of materials is prohibited unless approval is granted by the Wilton Planning Board upon consultation with the Wilton Water Department and demonstration by the applicant that the proposed crushing or washing of materials will not adversely impact the water resource that is the subject of the Wellhead Protection Area.

    3. Storage of liquid petroleum products or other hazardous materials is prohibited.

    4. Storage of equipment or vehicles is prohibited, except in a manner designed to eliminate the danger of contamination due to leakage.

    5. Maintenance of vehicles is prohibited.

    6. All vehicles and equipment shall utilize biodegradable, non-hazardous hydraulic fluid and such other biodegradable and non-hazardous fluids as may be commercially available. Exceptions for short-term activity are solely at the discretion of the Planning Board on a case-by-case basis based on the potential risk to the aquifer and water supply.

j. All on site handling, disposal, storage, processing or recycling of hazardous or toxic materials;

k. Automotive service and repair shops, and junk and salvage yards unless they are operated in accordance with New Hampshire State statutes, rules and regulations governing such uses; and

l. Bulk storage of toxic material for resale or distribution.

m. New large groundwater withdrawals within four-thousand (4,000) feet of the Wellhead Protection Area defined in this section, except as preempted by state statute. If permitted by state statute, the Town of Wilton, NH hereby requires any and all optional requirements, including, but not limited to "Pre-Testing Conference and Revised Withdrawal Testing Design. *(Adopted March 2007)*

n. Any new or expansion of a use or activity, within the WHPA defined above, listed in the NH Groundwater Protection Act list of Potential Contamination Sources (PCSs), as defined in RSA 485-C. *(Adopted March 2007)*

o. The siting or operation of a wastewater or septage lagoon within the WHPA or Aquifer district. *(Adopted March 2007)*

12.5 ***Performance Standards.***

All subdivision proposals and other proposed new developments within the Aquifer Protection District shall be reviewed by the Planning Board and shall conform to the provisions of this ordinance, the Subdivision Regulations of the Town of Wilton and the following:

a. All such proposals are consistent with the need to protect the groundwater of the Town of Wilton and adjacent communities.

b. All sanitary sewer systems are designed to minimize or eliminate leakage or discharges from the system into the groundwater.

c. On site waste disposal systems are located so as to avoid or minimize groundwater contamination.

d. All surface storm water generated by development is kept on-site and handled in such a manner as to allow the water to infiltrate into the ground before leaving the site.

e. Streets, roads, and parking areas are constructed so that the need for direct application of road salt is minimized for winter safety, and so that run-off from such uses is channeled to avoid or minimize groundwater contamination.

f. Written approval of the State of New Hampshire Department of Environmental Services, Water Supply and Pollution Control Division for subdivision and septic systems has been obtained.

g. Under the NH Groundwater Protection Act, existing uses or activities, within the WHPA, listed in RSA 485-C as Potential Contamination Sources (PCSs) shall follow Best Management Practices (BMPs) for Groundwater Protection as adopted under the NH Code of Administrative Rules Part ENV-Ws 421, Best Management Practices. *(Adopted March, 2007)*

12.6 ***Incorrectly Designated Zones.***

When the actual boundary of the Aquifer Protection District is in dispute by any owner or abutter actually affected by the boundary, the Planning Board, at the owner/abutters expense and request, may engage a professional geologist or hydrologist to determine more accurately the precise boundary of the Aquifer Protection District, who shall submit to the Planning Board his findings, including:

a. A detailed topographic layout of the subdivision and/or area to be developed, prepared by a registered land surveyor;

b. A revised soils map of the subdivision and/or area prepared by a certified soil scientist qualified in hydrologic studies including a written report of his on-site field inspection and test boring data;

c. The aquifer boundary as shown on the U.S. Geological Survey Map shall be overlaid on the plat and the newly proposed boundary location shall be indicated on the same plat by a broken line; and

d. Any additional mapping, hydrogeologic reports or information which becomes available, as a result of recent or on-going scientific investigation of the location and extent of aquifers, performed by the U.S. Geological Survey, New Hampshire State agencies or boards, the Town of Wilton or the agents of any of the above.

The Planning Board, based upon the findings presented by the applicant, may adjust the boundary or area designation of the Aquifer Protection District to reduce or expand the designated area to more correctly define the location and extent of the aquifer on a site-specific, case-by-case basis.

The Planning Board shall reserve the right to withhold action on the plat pending the results of an on-site and/or other investigation by the Board or its appointed agent and shall act to approve or disapprove the final plat within 65 days of submission or such further time as deemed necessary and as provided for by New Hampshire State statute as amended. (*Amended March 2018*)

12.7 ***Non-Conforming Uses.***

Non-conforming uses may continue in this district in the form in which they exist at the time of the adoption of this ordinance unless they pose a direct hazard to the aquifer or are actually introducing some foreign substances (oils, salts, chemicals, etc.) into the aquifer. In the latter case, the Selectmen shall issue an immediate cease and desist order to stop the offending activity or process from continuing activity in this district.

13.0 AGE-RESTRICTED HOUSING DISTRICT

13.1 Purpose.

The Age-Restricted Housing District is hereby established for the purpose of providing housing specifically designed to meet the needs of older persons while ensuring compliance with local planning standards and land use policies.

13.2 District Location.

Age-Restricted housing developments are permitted as a special exception by the Zoning Board of Adjustment and Site Plan review and approval by the Planning Board in the residential, general residential and agricultural, and commercial districts. (See also Section 4.4.)

In considering and granting a special exception, the Zoning Board shall determine that:

a. The proposed age-restricted housing development will not adversely impact the existing and future land uses in the underlying district;

b. The proposed location is appropriate for age-restricted housing and is consistent with the stated intent and standards of the Age-Restricted Housing District;

c. The parcel area is sufficient, appropriate and adequate for the proposed use and the reasonable anticipated operation;

d. The proposed age-restricted housing project will provide for the health, safety and welfare of the older occupants.

13.3 General Standards.

All housing for older persons shall conform to the following standards:

a. Dwelling unit density shall not be greater than twenty-four (24) units/gross tract acre for one (1) bedroom units or twelve (12) dwelling units/gross tract acre for two (2) bedroom units when served by Town water and sewer. For lots not served by Town water and sewer, the dwelling unit density shall not be greater than the density provisions of the underlying district.

b. Dwelling units shall have a maximum of two (2) bedrooms and shall be designed for and restricted to occupancy by older persons.

c. Housing developments for older persons shall not be required to conform to the requirement that there be one dwelling per lot. Building types permitted are cluster, townhouse and apartment structures. Apartment is defined as a structure with separate living units located adjacent to, below or above other living units.

d. Occupancy of all units within the development shall be limited to families where the head of household or spouse is at least sixty-two (62) years of age. *(Amended March 2020)*

e. The minimum lot area shall be 1 acre and the lot shall have at least one hundred (100) feet of frontage on a public right-of-way, Class V or better if served by water and sewer,

otherwise the minimum lot area shall be at least two (2) acres and the lot shall have two hundred (200) of frontage on a public right-of-way Class V or better. Lot coverage shall not exceed seventy-five (75) percent of the total lot area.

f. All buildings, driveway and parking areas shall be set back in conformance with the set back requirements of the underlying zoning district where the development is to be located. A vehicular drop-off area to the building may be located within the front yard set back.

g. Maximum building height is forty-five (45) feet.

h. Parking shall be provided in conformance with the parking standards established in the Site Plan Review Regulations. During Site Plan Review, the Planning Board may require additional parking for visitors and additional parking based upon distance of the development from the center of Town, income of the residents and access to alternate forms of transportation, shopping areas and other services.

i. All buildings shall be provided with the following safety features:

   1. Ramps to the first floor of each building;

   2. Non skid floors;

   3. Doors of sufficient width to accommodate wheelchairs;

   4. Electric cooking stoves;

   5. Electric outlets at levels at least twenty-four (24) inches above the floor;

   6. Showers in place of tubs for more than fifty (50) percent of the dwelling units and handicapped showers for twenty-five (25) percent of the dwelling units;

   7. Grab bars around tubs (where provided) and toilets;

   8. Lever handle-type spigots and door knobs; and

   9. Emergency signals which ring in adjoining apartments or at a central location.

j. Adequate ancillary facilities, usually associated with the group living needs for comfort, health, safety and welfare of older persons and not usually constructed for multi-family dwellings shall be provided to meet the need of the proposed population of the development. The floor area of such ancillary facilities shall not be less than five (5) percent of the total floor area of the building. These facilities may include dispensaries, medical facilities, common dining facilities, group recreation facilities, laundry facilities and other similar or related facilities.

k. The development shall be landscaped so as to be integrated with the Town. The perimeter of the development shall be landscaped with a sufficient buffer strip to minimize its intrusion on neighboring land uses.

l. The cumulative number of age-restricted dwelling units constructed in conformance with this Article shall not exceed 6% of the total number of dwelling units in the community.

13.4 ***Review of Site Plans.***

The Planning Board shall review and approve or disapprove the site plans for all proposed age-restricted housing. The review of any site proposed for age-restricted housing shall take into account its proximity to those support services (shopping, medical, transportation, etc.) necessary to meet the needs of older persons in addition to the standards contained in section 13.3. Where support services are absent or remote, provisions for such services shall be provided by the developer.

13.5 ***Change of Use.***

If any structure erected pursuant to a special exception and site plan review in accordance with this section ceases to be used exclusively for elderly housing, then the full zoning ordinance requirements for the new use must be met. Failure to comply with the zoning ordinance may result in a revocation of the certificate of occupancy for the structure.

14.0 WATERSHED DISTRICT

14.1 Purpose.

The purpose of the Watershed District is to preserve the quality of the water and to protect the health and welfare of the residents of the Town of Wilton by minimizing sources of pollution through regulation and restriction of population density and activity, and by keeping organic and inorganic wastes to a minimum.

14.2 District Boundary.

Watershed District shall mean the land and water areas which by seepage or flow introduce water into the old and new reservoirs of the Town. Generally, this includes, but is not restricted to, the watersheds of Mill Brook and Stockwell Brook above the reservoirs. The area shall be defined by the U.S. Soil Conservation Service of the Department of Agriculture and will be shown on the amended zoning map filed with the Town Clerk.

14.3 Lot Requirements.

14.3.1 Area. Minimum lot size six (6) acres per dwelling unit excluding wetlands, water bodies, land within the 100 year floodplain and land within the deeded flowage rights to the State of New Hampshire Flood Control System. *(Amended March 1992, March 2020)*

14.3.1.1 Alternative lot requirements. Alternative lots (See Section 6.3) shall have a minimum area of ten (10) acres per dwelling unit and meet the established six (6) acre requirement of this section. *(Amended March 1992)*

14.3.2 Frontage. A minimum of three hundred (300) feet on a Class V or better road. *(Amended March 1992)*

14.3.3 Setbacks. No residence, building, structure, feed lot, outflow from building drainage, septic system or its containment area shall be located less than two hundred (200) feet from open water and perennial streams nor less than one hundred-fifty (150) feet from intermittent streams, the 100 year floodplain, the deeded flowage rights to the State of New Hampshire Flood Control System, or any wetland or water body. *(Amended March 1992, March 2003, Amended March 2020)*

14.3.4 Erosion and Sediment Control. Any disturbance of slopes of fifteen (15) percent or more shall require an erosion and sediment control plan approved by the Planning Board.

14.3.5 Permitted changes within the setback area.
(Adopted March 2007)

1. The setback area defined in section 14.3.3 shall be left in its natural state and where existing, a natural woodland buffer shall be maintained.

2. Where existing, a natural woodland buffer must be maintained. Tree cutting shall be limited to not more than fifty (50) percent of the basal area of trees, and not more than fifty (50) percent of the total number of saplings, in a twenty (20) year period. A healthy, well-distributed stand of trees, saplings, shrubs, and ground cover shall be maintained. Stumps and their root systems must remain intact in the ground. Dead, diseased, fallen or

dangerous trees, saplings, limbs, shrubs, and ground cover may be removed following applicable Best Management Practices (BMPS).

One (1) driveway access may be permitted within the setback area, provided the driveway construction plan and erosion control plan are approved by the Planning Board in accordance with applicable zoning and regulations. As approved, necessary alteration of terrain, removal of rocks, stumps and roots are permitted exclusively for driveway construction and associated stormwater management and erosion control. Any activity or construction within the setback is subject to inspection as a condition of approval; solely to insure compliance with any approval or permit.

14.4 ***Prohibited Uses.***

The following uses are prohibited within the Watershed District. (Amended March 1991.)

a. The use of any hazardous or toxic materials or liquids within the above stated set back areas.

b. No pasturing of livestock or fowl will be permitted within one hundred (100) feet of open flowing water. It will be the responsibility of the land owner to protect the water by installing adequate and proper fencing.

c. No land shall be filled, excavated or graded and no land shall be used in such a way that would cause substantial or avoidable erosion or alter existing patterns of natural water flow in the Watershed District, except for those uses incidental to permitted residential and agricultural construction.

d. All uses other than residential or agricultural.

14.5 ***Cluster Development.***

Cluster developments shall be permitted within the Watershed District in accordance with the Cluster Development Regulation and provided such proposed Cluster Development shall conform to all setback requirements specified in this section.

14.6 ***Previous Regulations.***

This District will incorporate the regulation to protect the purity of the water of Mill Brook Wilton, under the provision of Chapter 57, Laws of 1899, entitled "An act for the better protection of public water supplies" as adopted at special Town Meeting on December 4, 1904.

14.7 ***Special Exceptions.***
(Adopted March 2001)

The following uses will only be allowed as special exceptions by the Zoning Board of Adjustment (ZBA) and by site plan review and approval by the Planning Board. (See also Section 4.4).

14.7.1 Commercial and Industrial Uses. The ZBA may, in appropriate cases subject to appropriate conditions, permit commercial or industrial uses in the District as a special exception, provided it is permitted in the underlying zoning district and complies with the requirements of Section 14.1 Purpose, Section 14.3 Lot Requirements and Section 4.6 Performance Standards.

15.0 PERSONAL WIRELESS SERVICE FACILITIES

(Adopted March 2001)

15.0.1 Purpose and Intent.

It is the express purpose of this Article to permit carriers to locate personal wireless service facilities within particular areas of the Town of Wilton consistent with appropriate land use regulations that will ensure compatibility with the visual and environmental features of the Town. Compatibility with the visual features of Wilton is measured based on the change in community scale and character in relation to the height, mass, materials, contrasts, or proportion within the surroundings of a proposed personal wireless service facility. This Article enables the review of the locating and siting of personal wireless service facilities by the Town of Wilton so as to eliminate or mitigate the visual and environmental impacts of personal wireless service facilities. This Article is structured to encourage carriers to locate on existing buildings and structures whenever possible. New ground-mounted personal wireless facilities are permitted, but only when the use of existing structures and buildings is found to be infeasible. Co-location is encouraged for all personal wireless service facility applications and the review of a personal wireless facility shall be on the basis of the site being built using all positions on the mount.

15.0.2 Applicability.

The terms of this Article and the Site Plan Review Regulations shall apply to personal wireless service facilities proposed to be located on property owned by the Town of Wilton, on privately owned property, and on property that is owned by any other governmental entity that acts in its proprietary capacity to lease such property to a carrier.

15.0.3 Definitions.

For the purpose of this Article, the following terms shall have the meaning given herein:

15.0.3.1 Antenna. The surface from which wireless radio signals are sent and/or received by a personal wireless service facility.

15.0.3.2 Antenna Array. A collection of antennas attached to a mount to send and receive radio signals.

15.0.3.3 Average Tree Canopy Height. An average height found by inventorying the height at above-ground level (AGL) of all trees over twenty (20) feet in height for a defined area, such as the area delineated in Section 15.4.1.6.

15.0.3.4 Camouflaged. A personal wireless service facility that is disguised, hidden, part of an existing or proposed structure, or placed within an existing or proposed structure.

15.0.3.5 Carrier. A company that provides personal wireless services; also sometimes referred to as a provider.

15.0.3.6 Co-location. The use of a single mount on the ground by more than one carrier (vertical co-location) or the same carrier with multiple licenses, and/or the use of several mounts on an existing building or structure by more than one carrier or the same carrier with multiple licenses.

15.0.3.7 Environmental Assessment (EA). An EA is a document required by the Federal Communications Commission (FCC) and the National Environmental Policy Act (NEPA) when a personal wireless service facility is placed in certain designated areas.

15.0.3.8 Equipment Shelter. An enclosed structure, cabinet, shed, vault, or box near the base of the mount within which are housed equipment for personal wireless service facilities, such as batteries and electrical equipment. Equipment shelters are sometimes referred to as base transceiver stations.

15.0.3.9 Facility. See Personal Wireless Service Facility.

15.0.3.10 Fall Zone. The area on the ground from the base of a ground-mounted personal wireless service facility that forms a circle with a diameter equal to the height of the facility, including any antennas or other appurtenances, as set forth in Figure 1. The fall zone is the area within which there is a potential hazard from falling debris (such as ice) or collapsing material.

Figure 1

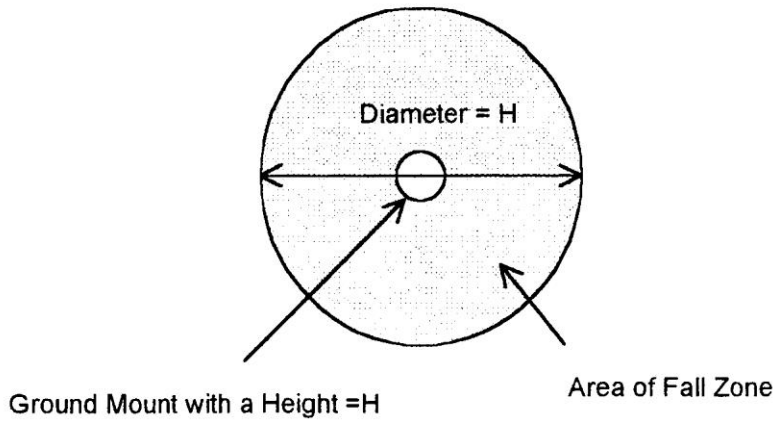

15.0.3.11 Guyed Tower. A monopole or lattice tower that is secured to the ground or other surface by diagonal cables for lateral support.

15.0.3.12 Height. The height above ground level (AGL) from the natural grade of a site to the highest point of a structure.

15.0.3.13 Lattice Tower. A type of mount with multiple legs and structural cross bracing between the legs that is self-supporting and free-standing.

15.0.3.14 Mast. A thin pole that resembles a street light standard or a telephone pole. A dual-polarized antenna is typically deployed on a mast.

15.0.3.15 Monopole. A thicker type of mount than a mast that is self-supporting with a single shaft of wood, steel or concrete, or other material, that is designed for the placement of antennas and arrays along the shaft.

15.0.3.16 Mount. The structure or surface upon which antennas are mounted, including the following four types of mounts:

1. Roof-mounted: mounted on the roof of a building.
2. Side-mounted: mounted on the side of a building.
3. Ground-mounted: mounted on the ground.
4. Structure-mounted: mounted on a structure other than a building.

15.0.3.17 Personal Wireless Service Facility. Facility for the provision of personal wireless services, as defined by the Telecommunications Act of 1996, as amended. Personal Wireless Service facilities include a mount, antenna, equipment shelter, and other related equipment.

15.0.3.18 Personal Wireless Services. The three types of services regulated by this Ordinance:

1. Commercial mobile radio services;
2. Unlicensed wireless services;
3. Common carrier wireless exchange access services as described in the Telecommunications Act of 1996, as amended.

15.0.3.19 Radio Frequency (RF) Engineer. An engineer specializing in electrical or microwave engineering, especially the study of radio frequencies.

15.0.3.20 Radio Frequency Radiation (RFR). The emissions from personal wireless service facilities.

15.0.3.21 Security Barrier. A wall, fence, or berm that restricts an area from unauthorized entry or trespass.

15.0.3.22 Separation. The distance between one carrier's array of antennas and another carrier's array.

15.1 District Regulations.

15.1.1 Location. Personal wireless service facilities shall be permitted in all Zoning Districts. Applicants seeking approval for personal wireless service facilities shall first evaluate existing structures for the siting of personal wireless service facilities. Only after finding that there are no suitable existing structures pursuant to Section 15.1.3 herein, shall a provider propose a new ground-mounted facility.

15.1.2 Existing Structures: Policy. Personal wireless service facilities shall be located on existing structures, including but not limited to buildings, water towers, existing telecommunications facilities, utility poles or towers, and related facilities, provided that such installation preserves the character and integrity of those structures.

15.1.3 Existing Structures: Burden of Proof. The applicant shall have the burden of proving that there are no existing structures which are suitable to locate its personal wireless service facility and/or transmit or receive radio signals. To meet that burden, the applicant shall take all the following actions to the extent applicable:

a. The applicant shall submit to the Planning Board a list of all contacts made with owners of potential sites regarding the availability of potential space for a personal wireless service facility. If the Planning Board informs the applicant that additional existing structures may be satisfactory, the applicant shall contact the property owner(s) of those structures.

b. The applicant shall provide copies of all letters of inquiry made to owners of existing structures and letters of rejection. If letters of rejection are not provided, at a minimum, unanswered "Return Receipt Requested" forms from the U.S. Postal Service shall be provided for each owner of existing structures that was contacted.

c. If the applicant claims that a structure is not capable of physically supporting a personal wireless service facility, this claim must be certified by a licensed professional civil engineer. The certification shall, at a minimum, explain the structural issues and demonstrate that the structure cannot be modified to support the personal wireless service facility without unreasonable costs. The estimated cost shall be provided to the Planning Board.

15.1.4 Ground-Mounted Facilities: Policy. If the applicant demonstrates that it is not feasible to locate on an existing structure, ground-mounted personal wireless service facilities shall be designed so as to be camouflaged to the greatest extent possible, including but not limited to use of compatible building materials and colors, screening, landscaping, and placement within trees.

15.2 Use Regulations.

A personal wireless service facility shall require a building permit in all cases and may be permitted as follows:

15.2.1 Existing Tower Structures. Subject to the issuance of a building permit that includes review by the Planning Board, which review shall be limited to issues relating to access, bonding, and security for removal, structural integrity and appropriate camouflage of such siting, carriers may locate a personal wireless service facility on any guyed tower, lattice tower, mast, or monopole in existence prior to the adoption of this Article, or on any personal wireless service facility previously approved under the provisions of this Article so long as the co-location complies with the approved site plan. All the Performance Standards from this Article shall be met. This provision shall apply only so long as the height of the mount is not increased, a security barrier already exists, and the area of the security barrier is not increased. Otherwise, site plan review is required.

15.2.2 Reconstruction of Existing Tower Structures. An existing guyed tower, lattice tower, monopole, or mast in existence prior to the adoption of this Article may be reconstructed with a maximum twenty (20) foot increase in height so as to maximize co-location so long as the standards of this Article are met and so long as this twenty (20) foot increase in height does not cause a facility previously existing at less than two hundred (200) feet to exceed two hundred (200) feet in height. The mount shall be replaced with a similar mount that does not significantly increase the visual impact on the community. Site plan review is required.

15.2.3 Existing Structures. Subject to the provisions of this Article, and minor site plan review under RSA 674:43:III, and except as otherwise permitted under Section 15.2.1, a carrier may locate a personal wireless service facility on an existing structure, building, utility tower or pole, or

water tower. For the purpose of this section, new structures that are conforming to all other district zoning requirements shall be considered as existing structures.

15.2.4 Ground-Mounted Facility. A personal wireless service facility involving construction of a ground mount shall require site plan review and be subject to the provisions of this Article.

15.3 Dimensional Requirements.

Personal wireless service facilities shall comply with the following requirements:

15.3.1 Height, Maximum. In no case shall a personal wireless service facility exceed two hundred (200) feet in height, unless the mount for the facility was greater than two hundred (200) feet in height prior to the adoption of this Article.

15.3.2 Height, Existing Structures and Utility Poles. Carriers that locate new personal wireless service facilities on water towers, electric transmission and distribution towers, utility poles and similar existing utility structures, guyed towers, lattice towers, masts, and monopoles may be permitted to increase the height of those structures no more than twenty (20) feet if the additional height will not materially impair the visual impacts of the site. This increase in height shall only be permitted once for each structure.

15.3.3 Height, Other Existing Structures. The height of a personal wireless service facility shall not increase the height of a structure by more than fifteen (15) feet, unless the facility is completely camouflaged; for example, a facility completely within a flagpole, steeple, or chimney. The increase in the height of the structure shall be in scale and proportion to the structure as originally configured. A carrier may locate a personal wireless service facility on a building that is legally nonconforming with respect to height, provided that the provisions of this Article are met.

15.3.4 Height, Ground-Mounted Facilities. Ground-mounted personal wireless service facilities shall not project higher than twenty (20) feet above the average tree canopy height within a one hundred and fifty (150) foot radius of the mount, security barrier, or designated clear area for access to equipment, whichever is greatest.

15.3.5 Setbacks. All personal wireless service facilities and their equipment shelters shall comply with the building setback provisions of the zoning district in which the facility is located. Fences shall comply with the setback provisions of the zoning district in which the facility is located if the fence is six (6) feet or more in height, in accordance with the appropriate Zoning Ordinances.

15.3.6 Fall Zone for Ground Mounts. In order to ensure public safety, the minimum distance from the base of any ground mount of a personal wireless service facility to any property line, public road, habitable dwelling, business or institutional use, or public recreational area shall be, at a minimum, the distance equal to the fall zone, as defined in this article. The fall zone may cross property lines, so long as the applicant secures a fall zone easement from the affected property owner(s). The area of the easement shall be shown on all applicable plans submitted to the Town, and the terms of the easement shall be provided as part of the site plan review.

15.3.7 Fall Zone for Non-Ground Mounts — In the event that an existing structure is proposed as a mount for a personal wireless service facility, a fall zone shall not be required, but the setback provisions of the zoning district shall apply. In the case of pre-existing nonconforming structures, personal wireless service facilities and their equipment shelters shall not increase any nonconformities.

15.4 Performance and Design Standards.

15.4.1 Visibility.

15.4.1.1 Visual impacts are measured on the basis of:

a. Change in community scale, as exhibited in relative height, mass or proportion of the personal wireless service facility within their proposed surroundings.

b. New visible elements proposed on a contrasting background.

c. Different colors and textures proposed against a contrasting background.

d. Use of materials that are foreign to the existing built environment.

15.4.1.2 Enhancements are measured on the basis of:

a. Conservation of opportunities to maintain community scale; e.g., buffering areas and low-lying buildings should not be compromised so as to start a trend away from the existing community scale.

b. Amount and type of landscaping and/or natural vegetation.

c. Preservation of view corridors, vistas, and view sheds.

d. Continuation of existing colors, textures, and materials.

15.4.1.3 Visibility focuses on:

a. Eliminating or mitigating visual impact.

b. Protecting, continuing, and enhancing the existing environment.

15.4.1.4 Camouflage for Facilities on Existing Buildings or Structures: Roof Mounts. When a personal wireless service facility extends above the roof height of a building on which it is mounted, every effort shall be made to conceal or camouflage the facility within or behind existing or new architectural features to limit its visibility from public ways. Facilities mounted on a roof shall be stepped back from the front façade in order to limit their impact on the building's silhouette.

15.4.1.5 Camouflage for Facilities on Existing Buildings or Structures: Side Mounts. Personal wireless service facilities which are side mounted shall blend with the existing building's architecture and, if individual antenna panels are over five (5) square feet, the panels shall be painted or shielded with material consistent with the design features and materials of the building.

15.4.1.6 Camouflage for Ground-Mounted Facilities. All ground-mounted personal wireless service facilities shall be surrounded by a buffer of dense tree growth that extends continuously for a minimum distance of one hundred and fifty (150) feet from the mount, security barrier, or designated clear area for access to equipment, whichever is greatest, and screens views of the facility in all directions, as set forth in Figure 2. These trees must be existing on the subject property, planted on site, or be within a landscape easement on an adjoining site. The Planning Board shall have the authority to decrease, relocate, or alter the required buffer based on site conditions. The one hundred and fifty (150) foot vegetative buffer area shall be protected by a landscape easement or be within the area of the carrier's lease. The easement or lease shall specify that the trees within the buffer shall not be removed or topped, unless the trees are dead or dying and present a hazard to persons or property.

Figure 2

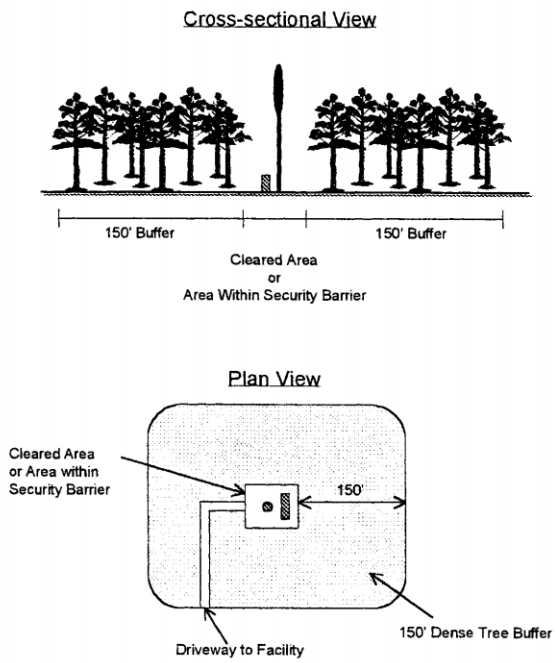

15.4.2 Color. To the extent that any personal wireless service facilities extend above the height of the vegetation immediately surrounding it, they shall be of a color which blends with the background or surroundings.

15.4.3 Equipment Shelters. Equipment shelters for personal wireless service facilities shall be designed consistently with one of the following design standards:

15.4.3.1 Equipment shelters shall be located in underground vaults; or

15.4.3.2 Equipment shelters shall be designed so that the shelters are architecturally consistent, with respect to materials and appearance, to the buildings in the area of the personal wireless service facility; or

15.4.3.3 Equipment shelters shall be camouflaged behind an effective year-round landscape buffer, equal to the height of the proposed building, and/or wooden fence. The Planning Board shall determine the style of fencing and/or landscape buffer that is compatible with the neighborhood; or

15.4.3.4 If mounted on a roof top, the equipment shelter shall be concealed or camouflaged so that the shelter either is not visible at grade or appears to be a part of the original structure.

15.4.4 Lighting, Signage, and Security.

15.4.4.1 Lighting. The mounts of personal wireless service facilities shall be lighted only if required by the Federal Aviation Administration (FAA). Lighting of equipment, structures and any other facilities on site shall be shielded from abutting properties. Any lighting shall not be visible off-site of the property. Foot-candle measurements at any height at the property line shall be 0.0 initial foot candles.

15.4.4.2 Signage. Signs shall be limited to those needed to identify the property and the owner and warn of any danger. All signs shall comply with the requirements of Section 16.0 SIGNS of the Wilton Zoning Ordinance.

15.4.4.3 Security Barrier. The Planning Board shall have final authority on whether a ground-mounted personal wireless service facility should be surrounded by a security barrier.

15.4.5 Historic Buildings and Districts.

15.4.5.1 Any personal wireless service facility located on or within an historic structure shall not alter the character-defining features, distinctive construction methods, or original historic materials of the building.

15.4.5.2 Any alteration made to an historic structure to accommodate a personal wireless service facility shall be fully reversible.

15.4.5.3 Personal wireless service facilities authorized by this subsection shall be concealed within or behind existing architectural features, or shall be located so that they are not visible from public roads and viewing areas.

15.4.5.4 Personal wireless service facilities located in the Wilton Historic District shall comply with the provisions of the Historic District Commission.

15.4.6 Scenic Landscapes and Vistas. Ground-mounted facilities shall not be located within open areas that are clearly visible from public roads, recreational areas, or abutting properties. All ground-mounted personal wireless service facilities shall be surrounded by a buffer of dense tree growth as per Section 15.4.1.6 of the Wilton Zoning Ordinance.

15.4.7 Driveways. If available, existing entrances and driveways to serve a personal wireless service facility shall be utilized, unless the applicant can demonstrate that a new entrance and driveway will result in less visual, traffic, and environmental impact. New driveways to serve a personal wireless service facility shall not exceed twelve (12) feet in width. A gravel or crushed stone surface is encouraged.

15.4.8 Antenna Types. Any antenna array placed upon an existing or proposed ground mount, utility pole, or transmission line mount shall have a diameter of no more than four (4) feet, exclusive of the diameter of the mount. A larger diameter antenna array may be permitted after a finding by the Planning Board that the visual impacts of a larger antenna array are negligible.

15.4.9 Ground and Roof Mounts. All ground mounts shall be of a mast type mount. Lattice towers, guyed towers, and roof-mounted monopoles are expressly prohibited, unless constructed as part of a reconstruction project permitted under Section 15.2.2 of the Wilton Zoning Ordinance.

15.4.10 Hazardous Waste. No hazardous waste shall be discharge on the site of any personal wireless service facility. If any hazardous materials are to be used on site, there shall be provisions for full containment of such materials. An enclosed containment area shall be provided with a sealed floor, designed to contain at least one hundred and ten percent (110%) of the volume of the hazardous materials stored or used on the site.

15.4.11 Noise. Personal wireless service facilities shall not generate noise in excess of that permitted under Section 4.6.2 Noise of the Wilton Zoning Ordinance.

15.4.12 Radio Frequency Radiation (RFR) Standards. All equipment proposed for a personal wireless service facility shall be fully compliant with the FCC Guidelines for Evaluating the Environmental Effects of Radio Frequency Radiation (FCC Guidelines, under *Report and Order*, FCC 96-326, published on August 1, 1996), and all subsequent amendments.

15.5 Monitoring and Maintenance.

15.5.1 Maintenance. The owner of the facility shall maintain the personal wireless service facility in good condition. Such maintenance shall include, but shall not be limited to, painting structural integrity of the mount and security barrier, and maintenance of the buffer areas and landscaping.

15.5.2 Monitoring. As part of the issuance of the site plan approval or building permit, the property owner shall agree that the Town of Wilton may enter the subject property to obtain RFR measurements and noise measurements at the expense of the carrier. The Town shall provide reasonable written notice to the carrier and landowner and provide them the opportunity to accompany the Town representatives when the measurements are conducted.

15.5.3 Security for Removal. Recognizing the hazardous situation presented by abandoned and unmonitored telecommunications facilities, the Planning Board shall set the form and amount of security that represents the cost for removal and disposal of abandoned telecommunications facilities in the event that a facility is abandoned and the facility owner is unwilling or unable to remove the facility in accordance with Section 15.6.2. The amount of the security shall be based upon the removal cost plus fifteen percent (15%), provided by the applicant and certified by a professional structural engineer licensed in New Hampshire. The owner of the facility shall provide the Planning Board with a revised removal cost estimate and structural evaluation prepared by a professional structural engineer licensed in New Hampshire every five (5) years from the date of the Planning Board's approval of the site plan. If the cost has increased more than fifteen percent (15%), then the owner of the facility shall provide additional security in the amount of the increase.

15.6 ***Abandonment or Discontinuation of Use.***

15.6.1 Notification. At such time that a carrier plans to abandon or discontinue operation of a personal wireless service facility, such carrier will notify the Town by certified U.S. mail of the proposed date of abandonment or discontinuation of operations. Such notice shall be given no less than thirty (30) days prior to abandonment or discontinuation of operations. In the event that a carrier fails to give such notice, the personal wireless service facility shall be considered abandoned upon such discontinuation of operations.

15.6.2 Removal. Upon abandonment or discontinuation of use, the owner of the facility shall physically remove the personal wireless service facility within ninety (90) days from the date of abandonment or discontinuation of use. "Physically remove" shall include, but not be limited to:

a. Removal of antennas, mount, equipment shelters and security barriers from the subject property.

b. Proper disposal of the waste materials from the site in accordance with local and state solid waste disposal regulations.

c. Restoring the location of the personal wireless service facility to its natural condition, except that any landscaping and grading shall remain in the after-condition.

15.6.3 Failure to Remove. If the owner of the facility does not remove the facility upon the Zoning Administrator's order, then the Board of Selectmen shall, after holding a public hearing with notice to the owner and abutters, issue a declaration of abandonment. The owner of the facility shall dismantle and remove the facility within ninety (90) days of receipt of the declaration of abandonment by the Board of Selectmen. If the abandoned facility is not removed within ninety (90) days, the Town may execute the security to pay for this action.

15A.0 SMALL WIND ENERGY SYSTEMS

(Adopted March 2010)

15A.1 Purpose.

This small wind energy systems ordinance is enacted in accordance with RSA 674:62-66, and the purposes outlined in RSA 672:1-III-a. The purpose of this ordinance is to accommodate small wind energy systems in appropriate locations, while protecting the public's health, safety and welfare. In addition, this ordinance provides a permitting process for small wind energy systems to ensure compliance with the provisions of the requirements and standards established herein.

15A.2 Definitions.

15A.2.1 Meteorological tower (MET tower). Includes the tower, base plate, anchors, guy wires and hardware, anemometers (wind speed indicators), wind direction vanes, booms to hold equipment for anemometers and vanes, data loggers, instrument wiring, and any telemetry devices that are used to monitor or transmit wind speed and wind flow characteristics over a period of time for either instantaneous wind information or to characterize the wind resource at a given location. For the purpose of this ordinance, met towers shall refer only to those whose purpose are to analyze the environmental factors needed to assess the potential to install, construct or erect a small wind energy system.

15A.2.2 Modification. Any change to the small wind energy system that materially alters the size, type or location of the small wind energy system. Like-kind replacements shall not be construed to be a modification.

15A.2.3 Net metering. The difference between the electricity supplied to a customer over the electric distribution system and the electricity generated by the customer's small wind energy system that is fed back into the electric distribution system over a billing period.

15A.2.4 Power grid. The transmission system, managed by ISO New England, created to balance the supply and demand of electricity for consumers in New England.

15A.2.5 Shadow flicker. The visible flicker effect when rotating blades of the wind generator cast shadows on the ground and nearby structures causing a repeating pattern of light and shadow.

15A.2.6 Small wind energy system. A wind energy conversion system consisting of a wind generator, a tower, and associated control or conversion electronics, which has a rated capacity of 100 kilowatts or less and will be used primarily for onsite consumption.

15A.2.7 System height. Means the vertical distance from ground level to the tip of the wind generator blade when it is at its highest point.

15A.2.8 Tower. The monopole, guyed monopole or lattice structure that supports a wind generator.

15A.2.9 Tower height. The height above grade of the fixed portion of the tower, excluding the wind generator.

15A.2.10 Wind generator. The blades and associated mechanical and electrical conversion components mounted on top of the tower whose purpose is to convert kinetic energy of the wind into rotational energy used to generate electricity.

15A.3 ***Location***

The installation and operation of small wind energy system facilities are permitted in the General Residence and Agricultural District. They are also permitted as special exceptions by the Zoning Board of Adjustment in the General Residence District, Commercial District and Industrial District. When reviewing an application for a special exception under this section, the Zoning Board shall consider the factors listed in section 15A.5.3, "Review Considerations." (See also Section 4.4)

15A.4 ***Standards.***

15A.4.1 Setbacks. The setback for small energy system towers shall be equal to one and one-half (1½) times the proposed system height. Small wind energy systems must meet all setbacks for principal structures for the zoning district in which the system is located.

15A.4.2 System Height. The maximum system height shall be restricted to 35 feet above the tree canopy within 300 feet of the small wind energy system. In no situation shall the system height exceed 150 feet.

15A.4.3 Sound Level. The combined sound level of all small wind energy systems on a site shall not exceed 55 decibels using the A scale (DBA), as measured at the site property line, except during short-term events such as severe wind storms and utility outages.

15A.4.4 Shadow Flicker. Small wind energy systems shall be sited in a manner that does not result in shadow flicker impacts offsite. The applicant has the burden of proving that the shadow flicker will not be visible to neighboring or adjacent uses. Potential shadow flicker will be addressed either through siting or mitigation measures.

15A.4.5 Signs. All signs including flags streamers and decorative items, both temporary and permanent, are prohibited on the small wind energy system, except for manufacturer identification or appropriate warning signs.

15A.4.6 Code Compliance. The small wind energy system shall comply with all applicable sections of the New Hampshire State Building Code.

15A.4.7 Aviation. The small wind energy system shall be built to comply with all applicable Federal Aviation Administration regulations including but not limited to 14 C.F.R. part 77, subpart B regarding installations close to airports, and the New Hampshire Aviation regulations, including but not limited to RSA 422-b and RSA 424.

15A.4.8 Visual Impacts. It is inherent that small wind energy systems may pose some visual impacts due to the tower height needed to access wind resources. The purpose of this section is to reduce the visual impacts, without restricting the owner's access to the optimal wind resources on the property.

a. The applicant shall demonstrate through project site planning and proposed mitigation that the small wind energy system's visual impacts will be minimized for surrounding neighbors and the community. This may include, but not be limited to information regarding site selection, wind generator design or appearance, buffering, and screening of ground mounted electrical and control equipment. All electrical conduits shall be underground.

b. The color of the small wind energy system shall either be the stock color from the manufacturer or painted with a non-reflective, unobtrusive color that blends in with the surrounding environment. Approved colors include but are not limited to earth tones, off-white or gray.

c. A small wind energy system shall not be artificially lit unless such lighting is required by the Federal Aviation Administration (FAA). If lighting is required, the applicant shall provide a copy of the FAA determination to establish the required markings and/or lights for the small wind energy system.

15A.4.9 Capacity. The total combined output capacity of all small wind energy systems on a single lot must not exceed 100 kw.

15A.4.10 Approved Wind Generators. The manufacturer and model of the wind generator to be used in the proposed small wind energy system must have been approved by the California Energy Commission or the New York State Energy Research and Development Authority, or a similar list approved by the state of New Hampshire, if available.

15A.4.11 Utility Connection. If the proposed small wind energy system is to be connected to the power grid through net metering, it shall adhere to RSA 362-A:9.

15A.4.12 Access. The tower shall be designed and installed so as not to provide step bolts or a ladder readily accessible to the public for a minimum height of 8 feet above the ground. All ground-mounted electrical and control equipment shall be labeled and secured to prevent unauthorized access.

15A.4.13 Clearing. Clearing of natural vegetation shall be limited to that which is necessary for the construction, operation and maintenance of the small wind energy system and as otherwise prescribed by applicable laws, regulations, and ordinances.

15A.5 Site Plan Review.

15A.5.1 Review Required. All small wind energy systems, their towers and associated equipment shall be subject to site plan review and approval by the Planning Board. Site plan review by the Planning Board shall be required for any physical modification to an existing small energy wind system. MET towers that receive site plan approval shall be permitted on a temporary basis not to exceed three (3) years from the date the building permit to construct the MET Tower was issued.

15A.5.2 Application. An application with designs for towers, additional support features and all associated facilities and accessories shall be submitted to the Planning Board. Applications shall contain a site plan with the following information:

a. Property lines and physical dimensions of the applicant's property.

b. Location, dimensions, and types of existing major structures on the property.

c. Location of the proposed small wind energy system, foundations, guy anchors and associated equipment.

d. Tower foundation blueprints or drawings.

e. Tower blueprints or drawings.

f. Setback requirements as outlined in this ordinance.

g. The right-of-way of any public road that is contiguous with the property.

h. Any overhead utility lines.

i. Small wind energy system specifications, including manufacturer, model, rotor diameter, tower height, tower type, nameplate generation capacity.

j. Small wind energy systems that will be connected to the power grid shall include a copy of the application for interconnection with their electric utility provider.

k. Sound level analysis prepared by the wind generator manufacturer or qualified engineer.

l. Electrical components in sufficient detail to allow for a determination that the manner of installation conforms to the NH State Building Code.

m. Evidence of compliance or non-applicability with Federal Aviation Administration requirements.

n. List of abutters to the applicant's property.

15A.5.3 Review Considerations. When considering applications for the construction and operation of small wind energy systems, the Planning Board and the Board of Adjustment will consider factors including, but not limited to:

a. Proximity to residential buildings.

b. Physical and visual impact of the system on surrounding properties.

c. Effect on the value of surrounding properties.

d. Effect on the character and natural features of the site and surrounding properties.

e. Frequency of maintenance visits to the site.

f. Potential nuisances such as interference with neighborhood television, telephone or radio reception.

g. Comments from abutters.

15A.5.4 Public Notice. Public notification will be in accordance with the Site Plan Review Process.

15A.5.5 Security for Removal. The applicant shall post a bond to cover the cost of removal of the small wind energy system and site restoration in the event of abandonment.

15A.6 Abandonment or Discontinuation of Use.

15A.6.1 Notification. At such time that a small wind energy system is scheduled to be abandoned or discontinued, the applicant will notify the planning board and building inspector by certified U.S. mail of the proposed date of abandonment or discontinuation of operations.

15A.6.2 Removal. Upon abandonment or discontinuation of use, the owner shall physically remove the small wind energy system within 90 days from the date of abandonment or discontinuation of use. This period may be extended at the request of the owner and at the discretion of the building inspector. "Physically remove" shall include, but not be limited to:

a. Removal of the wind generator and tower and related above-grade structures.

b. Restoration of the location of the small wind energy system to its natural condition, except that any landscaping, grading or below-grade foundation may remain in its same condition at initiation of abandonment.

15A.6.3 Abandonment. In the event that an applicant fails to give such notice, the system shall be considered abandoned or discontinued if the system is out-of-service for a continuous 12-month period. After the 12 months of inoperability, the building inspector may issue a Notice of Abandonment to the owner of the small wind energy system. The owner shall have the right to respond to the Notice of Abandonment within 30 days from Notice receipt date. After review of the information provided by the owner, the building inspector, with consultation from the Planning Board, shall determine if the small wind energy system has been abandoned. If it is determined that the small wind energy system has not been abandoned, the building inspector shall withdraw the Notice of Abandonment and notify the owner of the withdrawal.

15A.6.4 Failure to Remove. If the owner fails to respond to the Notice of Abandonment or if, after review by the building inspector, it is determined that the small wind energy system has been abandoned or discontinued, the owner of the small wind energy system shall remove the wind generator and tower at the owner's sole expense within 3 months of receipt of the Notice of Abandonment. If the owner fails to physically remove the small wind energy system after the Notice of Abandonment procedure, the building inspector or Board of Selectmen may pursue legal action to have the small wind energy system removed at the owner's expense.

15A.7 Violation.

It is unlawful for any person to construct, install, or operate a small wind energy system that is not in compliance with this ordinance. Small wind energy systems installed prior to the adoption of this ordinance are exempt from this ordinance except when modifications are proposed to the small wind energy system.

15A.8 ***Penalties.***

Any person who fails to comply with any provision of this ordinance or a building permit issued pursuant to this ordinance shall be subject to enforcement and penalties as allowed by NH Revised Statutes Annotated Chapter 676:17

15B.0 SOLAR COLLECTION SYSTEMS

(Adopted March 2020)

15B.1 Authority and Purpose

This solar collection system ordinance is enacted in accordance with RSA 674:17(I)(j) and for the purposes outlined in RSA 672:1-III-a, as amended. This ordinance is intended to accommodate solar energy collection systems and distributed generation resources in appropriate locations, while protecting the public's health, safety and welfare, and to facilitate the State and National goals of developing clean, safe, renewable energy resources in accordance with the enumerated polices of NH RSA 374-G and 362-F.

15B.2 Definitions

15B.2.1 Agricultural System. Any SCS intended primarily to reduce on-site consumption of utility power for agricultural uses with (a) a Rated Capacity of one megawatt (MW) alternating current (AC) or less and (b) five acres or less Solar Land Coverage, provided any existing agricultural use is preserved at the time of installation.

15B.2.2 Ground Mounted. The portion of an SCS that is affixed to or placed upon the ground including, without limitation, fixed, passive or active tracking or racking systems, as well as mobile solar collection equipment with more than 64 square feet of collecting surface which remains anywhere on a site for more than 30 consecutive days.

15B.2.3 Industrial System. Any SCS intended to (1) reduce on-site consumption of utility power, (2) generate power for sale to customers, or (3) produce energy strictly for distribution to the power grid, with (a) a Rated Capacity of 30 MW AC or less and (b) 100 acres or less Solar Land Coverage.

15B.2.4 Large Commercial System. Any SCS intended primarily to reduce on-site consumption of utility power with (a) a Rated Capacity of five MW AC or less and (b) 20 acres or less Solar Land Coverage.

15B.2.5 Rated Capacity. Maximum rated AC output of an SCS based on its design output.

15B.2.6 Residential System. Any SCS intended primarily to reduce on-site residential consumption of utility power with (a) a Rated Capacity of 12 kilowatt (kW) AC or less and (b) 1000 square feet or less Solar Land Coverage.

15B.2.7 Roof Mounted. The portion of an SCS that is mounted on the roof of a permitted structure, including the roof of a garage or over a carport or parking area that is an Accessory Building. The Roof Mounted portion of an SCS shall not be included in the calculation of the SCS's Solar Land Coverage.

15B.2.8 Shared System. Any SCS intended primarily to reduce residential and/or commercial consumption of utility power by multiple consumers (e.g., households or businesses) who either (a) own, directly or indirectly, the SCS, or (b) are tenants of the property to be served by the SCS, with (1) a Rated Capacity of 100 kW AC or less and (2) one acre or less Solar Land Coverage. A Shared System could be appropriate for cluster developments, commercial or residential condominiums or cooperatives, or apartment buildings, among others.

15B.2.9 Small Commercial System. Any SCS intended primarily to reduce on-site commercial consumption of utility power with (a) a Rated Capacity of 12 kW AC or less and (b) 500 square feet or less Solar Land Coverage.

15B.2.10 Solar Collection System or SCS. All equipment required to harvest solar energy to generate electricity, including, without limitation, collection and storage devices, mounting hardware and ballast, power conditioning equipment, transfer equipment and parts related to the functioning of that equipment. Solar Collection Systems do not include the equipment used to connect an SCS to the utility grid or site service point or equipment used after that point.

15B.2.11 Solar Land Coverage. The land area of a lot on which all components of the SCS, other than Roof Mounted equipment or equipment installed inside a permitted building, are installed, including, without limitation, mounting equipment, panels and ancillary components, but not including access roads or fencing. Solar Land Coverage shall not equate to impervious surface as that term is used in this ordinance.

15B.3 Table of Permitted Uses.

Notwithstanding anything to the contrary contained elsewhere in the Town zoning ordinance, Solar Collections Systems complying with this ordinance shall be permitted in the following districts:

System	**Zoning District**					
	Residential	**Residential/ Agricultural**	**Commercial**	**Downtown Commercial**	**Industrial**	**Office Park/ Research and Office Park**
Residential	P	P	P	X	X	X
Shared	P	P	P	X	P	P
Agricultural	X	P	P	X	X	X
Small Commercial	X	X	P	P	P	P
Large Commercial	X	X	P	X	P	P
Industrial	X	X	X	X	P	X

P = Use permitted by right with building and electrical permits.
X = Use prohibited.

15B.4 ***<u>General Requirements and Exemptions.</u>***

15B.4.1 The installation and operation of Solar Collection Systems shall comply at all times with applicable building, utility, electrical, fire and other safety codes; State and Federal laws and regulations; local noise and other ordinances, and the performance standards of this ordinance. A copy of the approved interconnection application for all Solar Collection Systems that are tied into the utility grid shall be filed with the Town.

15B.4.2 Except as expressly set forth below, all proposed Solar Collection Systems shall require prior Site Plan review and approval by the Planning Board.

15B.4.3 Ground Mounted Solar Collection Systems:

a. No Ground Mounted portion of an SCS shall exceed 30 feet in height, provided that it shall be no more than 20 feet in height at the permitted building perimeter on the lot.

b. The Ground Mounted portions of Residential Systems shall be located in a side or rear yard between the primary structure and the relevant lot line and shall be reasonably screened from abutting residential properties.

c. The Ground Mounted portions of Solar Collection Systems shall comply with the impervious surface limitations and related stormwater management requirements in this ordinance and, to the extent they do not conflict with such requirements, any stormwater management requirements imposed in the underlying zoning district(s) and/or overlays.

d. The Solar Land Coverage of Ground Mounted Solar Collection Systems shall be included in the calculation of maximum lot coverage permitted in the underlying zoning district(s) and/or overlays.

15B.4.4 Roof Mounted Solar Collection Systems:

a. The Roof Mounted portions of Solar Collection Systems may not exceed the height restrictions applicable to buildings in the underlying zoning district.

b. Wholly Roof Mounted Residential Systems are exempt from Site Plan review requirements.

15B.4.5 Solar Collection Systems used primarily to benefit the Town of Wilton are municipal systems exempt from land use regulations pursuant to NH RSA 674:54. Solar Collection Systems operated by third parties on land leased from the Town are not exempt municipal systems.

15B.4.6 Solar Collection Systems, other than utility connection equipment, shall be deemed structures that must comply with the setback requirements of the underlying zoning district(s) and/or overlays. The setback for a tracking system in an SCS shall be measured from where the array is closest to the lot line and no portion of an SCS may cross into the setback area.

15B.4.7 The site of an SCS shall be altered only to the extent necessary for its installation and operation and for sufficient all-season access thereto. To the fullest extent practicable, following installation, the site shall be restored to its original state, and, where appropriate, with native species that are consistent with the use of the site (such as slow growth or low ground cover). Placement and installation of Solar Collection Systems shall minimize impact on agricultural activities.

15B.5 ***Site Plan Review.***

The application for a Site Plan review shall comply with the following, as well as any other Site Plan Review Regulations not otherwise covered in this Section 15B.5. To the extent that any of the requirements of this Section 15B.5 conflict with any of the requirements of the Site Plan Review Regulations, the requirements of this Section 15B.5 shall prevail. The Site Plan shall include:

15B.5.1 Site Conditions and System Layout. A scale drawing indicating, without limitation, (a) the topography and vegetation in the installation area, both pre- and post-installation, and (b) the location of all equipment to be installed on site, including utility connection point(s) and equipment. To the maximum extent practical, all wiring associated with the utility connection shall be underground.

15B.5.2 Equipment Specifications. Manufacturers' specifications for all proposed equipment and its output, as well as for noise generation, anti-reflective materials and other characteristics of the system from time to time identified by the Planning Board.

15B.5.3 Emergency Response. (a) Drawings indicating where access to the site for emergency response is located; (b) a narrative or manual detailing response guidance and disconnection locations; and (c) additional industry guidance addressing safety procedures for specific equipment on site.

15B.5.4 Natural Resource Buffers. A buffering plan demonstrating how the Ground Mounted portion of an SCS will be effectively screened from public ways and neighboring views, including, without limitation, (a) the location, height and spacing of existing vegetation to be preserved: (b) areas of new planting and the type thereof; and (c) how existing or manufactured topography will be used to reduce visual impact.

15B.5.5 Fencing. The location and composition of any fencing required by applicable code or the utility, provided that the Ground Mounted portion of an SCS with a Rated Capacity greater than 100kW AC shall be fenced. The Planning Board may, in addition, require additional security or fencing if the location of the SCS presents a safety concern for abutting land uses.

15B.5.6 Erosion Control. The means and location of erosion control measures during installation.

15B.5.7 Lighting and Glare: The location, type, strength and direction of all lighting for Ground Mounted equipment or otherwise added to an SCS site, in each case solely to identify access or address safety requirements. For Agricultural, Large Commercial and Industrial Systems, an assessment of potential glare onto abutting structures and roadways, based on different sun to panel angles, seasons, and visibility locations. The Planning Board may require reasonable mitigation of potentially significant glare, including, without limitation, adjustment of the angle of panels, anti-reflective panel coatings, or additional specific screening.

15B.5.8 Natural Resource Inventory. If the SCS will disturb ten or more acres of previously undisturbed land, a natural resource inventory detailing site conditions and habitats, as well as undertakings to mitigate any adverse impact on the affected habitats.

15B.6 ***Stormwater Requirements for Ground Mounted Solar Collection Systems.***

15B.6.1. Requirements for All Ground Mounted Solar Collection Systems. The Ground Mounted portions of Solar Collection Systems shall be installed in accordance with best management practices for erosion, sedimentation and runoff control during all site preparation, installation and post-installation restoration phases, in order to maintain healthy surface and subsurface conditions that can attenuate stormwater.

15B.6.2 SCS Requiring NH DES Alteration of Terrain (AoT) Permit (RSA 485:17):

a. An applicant shall file the final AoT permit with the Town. The terms and conditions of the permit shall be incorporated by reference into any Planning Board approval of the SCS and shall be enforceable by the Town in accordance with this ordinance.

b. The holder of an AoT permit shall not be required to comply with the requirements of Section 15B.6.3 of this ordinance, although the Planning Board may, but shall not be required to, perform further review of stormwater and erosion controls in place at the site of the SCS where an AoT permit has been issued. Issuance of the permit shall not affect the applicant's obligations to address all issues required by a Site Plan review.

15B.6.3 SCS Not Requiring an AoT Permit:

a. If the Ground Mounted portion of an SCS (a) requires land clearing and grubbing of mature forested cover (1) to accommodate more than 30% of the proposed Solar Land Coverage and (2) over more than one acre, or (b) has Solar Land Coverage greater than one acre and is located on a slope greater than five percent, the applicant shall submit a plan to manage stormwater runoff that is directly related to the SCS.

b. The stormwater management plan referred to in Section 15B.6.3.1 shall take into account the nature of the installation and how the spacing, slope and row separation of collection equipment will affect or enhance stormwater infiltration. Percolation tests or site-specific soil information may be provided to demonstrate that recharge can be achieved without engineered solutions. The Planning Board may require additional information about the potential for concentrated runoff due to the type of collection equipment, slope, soil type and the impact of other true impervious areas (such as equipment pads and roadways).

15B.7 ***Abandonment and Decommissioning.***

15B.7.1 The owner or operator of an SCS other than a Residential System shall give not less than [one] month's prior written notice to the Town of its intent to cease operation of the SCS for any reason. An SCS shall be deemed to be abandoned or decommissioned upon the earlier to occur of (a) the date on which its operation will cease as indicated in the notice to the Town or (b) six months after operation thereof has been discontinued for any reason, unless the Town has given its prior written consent to the discontinuance.

15B.7.2 The Ground Mounted portions of an abandoned or decommissioned SCS that are above grade shall be removed in accordance with applicable State, Federal and local rules, regulations and ordinances, including, without limitation, requirements for the disposal of hazardous materials, and the site shall be restored to its natural state, within six months following the date on which it is abandoned or decommissioned. The Building Inspector shall inspect the site and determine whether removal has complied with this ordinance.

15B.7.3 The application for a Large Commercial or Industrial System shall include a plan addressing the decommissioning of the SCS and the removal of the equipment as required by Section 15B.7.2. As a condition to the approval of a Large Commercial or Industrial System, the owner or operator shall post a bond or other surety in an amount and on terms and conditions determined by the Planning Board and issued by an institution acceptable to it, covering the full cost of removing the SCS if it is not properly and timely removed as required by Section 15B.7.2. The Planning Board may review the amount of the bond or surety from time to time and require it to be adjusted so that it is adequate for its purpose.

16.0 SIGNS

The purpose of this ordinance is to preserve the visual character of Wilton while providing signs that direct and indicate the location of a business; identify businesses or individuals within a building; denote a service; or enhance traffic and pedestrian safety. Signs shall be permitted in each district as follows. *(Amended March 2016)*

16.1 General Provisions.

(Amended March 2001, March 2014, March 2016)

a. All signs shall be constructed of durable material and maintained in good condition at all times. Signs should complement the building on which they are located and add to the community image as a whole. Materials, color, lettering and shape should be compatible with surrounding building materials, colors and textures. Use of sandblasted, carved or painted signs of traditional materials, such as wood, granite or metal, is encouraged.

b. Signs placed or erected by the Town or State for the purpose of showing street names, traffic directions or regulations, or other municipal or governmental purposes are exempt from the following regulations.

c.1 Temporary signs are allowed to be placed for thirty days in a calendar year without approval or a sign permit. Signs advertising short-term events can be erected three weeks prior to the event and shall be removed within one week following the date of the event. Temporary signs shall comply with the requirements defined elsewhere in this section. Temporary signs shall not be lighted. Only one temporary sign will be permitted on a lot. Portable reader-board signs can only be used as temporary signs. *(Amended March 2014, March 2016)*

c.2 Additional temporary signage without approval or sign permit may be located on the owner's property when that property is being offered for sale, rent or lease and for a period of 15 days following the date of the closing or rental/lease of the premises.

a. one (1) wall or ground sign per premises, two (2) on corner lots;
b. the size of signs must conform to those permitted in the underlying zoning district;
c. temporary signs can be placed on privately owned land only with the permission of the land owner. *(Adopted March 2016)*

d. Before erecting a sign, the applicant must first submit an application for a sign permit to the Building Inspector. The Building Inspector will review and approve/disapprove the application and issue the sign permit on approval. The sign permit fee must be paid upon issuance of the sign permit. The Building Inspector may approve any signs which conform to the Zoning Ordinance and any applicable site plans. The application for the permit shall include: a detailed drawing and description of the sign, materials to be used, mounting hardware, type and intensity of lighting, dimensions of display area, and the location of the sign on the building or property. *(Amended March 2014, March 2016)*

e. In addition to the penalty provisions of section 22.0, non-conforming signs and/or signs erected without a permit may be removed by the Town of Wilton at the expense of the sign's owner.

f. *(Repealed March 2016)*

g. Any sign proposed to replace a sign that existed as of March 13, 2001, shall comply with the provisions of this section and obtain a sign permit from the Building Inspector. *(Amended March 2014, March 2016)*

h. Any of the following signs are prohibited in all zoning districts except as specifically permitted in this ordinance.

1. Off-premises signs.

2. Billboards.

3. Animated, flashing or intermittently illuminated signs.

4. Internally illuminated signs.

5. Signs located on town property or within the public right-of-way. *(Amended March 2016)*

16.2 ***Residential District and General Residence and Agricultural District.***

16.2.1 Permitted Signs.

16.2.1.1 Number. One (1) sign per parcel. *(Amended March 2016)*

16.2.1.2 Size. Maximum of four (4) square feet in area per face, two (2) faces may be used.

16.2.1.3 Location and Height. The top of any freestanding sign shall not be over six (6) feet above the existing ground level. A building sign must not extend above the roof eaves or the rake of the gable end. *(Amended March 2016)*

16.2.1.4 Lighting. No signs shall be illuminated in such a manner as to cause glare, obstruct or interfere with the vision of drivers on the road.

16.2.1.5 *(Repealed March 2001)*

16.2.2 *(Repealed March 2001)*

16.3 ***Commercial and Industrial District.***

This section governs signs in the Commercial District and Industrial District. *(Amended March 2019)*

16.3.1 Permitted Signs.

16.3.1.1 Number. One (1) sign or structure per parcel relating only to the permitted use or uses conducted in the building or on the immediate premises thereof. *(Amended March 2016)*

16.3.1.2 Size. Maximum of one hundred (100) square feet in area per face and a maximum of two faces may be used.

16.3.1.3 Location and Height. The top of any sign shall not exceed sixteen (16) feet above existing ground level. No building sign shall extend above the roof eaves or the rake on the gable end. No sign (except building mounted) shall be placed within fifteen (15) feet of lot lines. All signs or structures must be placed in such a manner that does not obstruct free and clear vision of automobiles or pedestrian traffic. *(Amended March 2003, March 2016.)*

16.3.1.4 Lighting. Signs may be illuminated but the lighting shall be confined to the area of the sign and arranged to avoid glare or reflection onto any portion of an adjacent highway, into the path of on-coming vehicles or onto any residential premises, and shall not significantly contribute to light pollution.

16.3.1.5 *(Repealed March 2001)*

16.3.1.6 Multi-tenant Buildings. A multi-tenant building may have one free-standing sign of up to one hundred (100) square feet. In addition, each individual tenant may have one (1) sign attached to the building with a maximum area of four (4) square feet for the purpose of identifying the type and location of the business or service.

16.3.1.7 Company Symbols and Trademarks. Company symbols and trademarks shall be considered as signs and must meet all of the above requirements.

16.3.1.8 Industrial Parks. As a part of the subdivision of land for an industrial park, the Planning Board may require one (1) directory sign identifying the names and locations of the individual businesses within the park to be located near the entrance of the park. The Directory sign should show the locations of the individual businesses within the park. The sign shall have a maximum area of thirty-two square feet. *(Amended March 2016)*

16.3.2 *(Repealed March 2001)*

16.4 Office Park District.

16.4.1.1 Park Development Sign. One (1) park development sign, for informational purposes only, carrying the park name at the park entrance. The sign shall have a maximum area of one hundred (100) square feet with a maximum height of sixteen (16) feet above the entrance road.

a. One (1) sign shall be located near the entrance of the park and have a maximum area of thirty-two (32) square feet. *(Amended March 2016)*

b. Two (2) additional signs with a Maximum size of two (2) square feet, may be located at driveway intersections. *(Amended March 2016)*

16.4.1.2 Directory Sign. One (1) directory sign identifying the names and locations of the individual businesses within the park shall be located near the entrance of the park. The Directory sign should show the locations of the individual businesses within the park. The sign shall have a maximum area of thirty-two (32) square feet.

16.4.1.3 Small directional signs. Maximum size of two (2) square feet, may be located at driveway intersections.

16.4.1.4 Lighting. Signs may be illuminated but the lighting shall be confined to the area of the sign and arranged to avoid glare or reflection onto any portion of an adjacent highway, into the path of on-coming vehicles or onto any residential premises, and shall not significantly contribute to light pollution.

16.4.2 Prohibited Signs.

a. Neon signs.

b. Mobile or temporary signs.

16.4.3 Company Symbols and Trademarks.

Company symbols and trademarks shall be considered as signs and must meet all of the above restrictions.

16.5 Downtown Commercial District.

The following regulations apply to signs located in the Downtown Wilton area as defined in Section 7A.1. *(Amended March 2019)*

16.5.1 Permitted Signs.

16.5.1.1 Number. One (1) more than the number of businesses located on a parcel or four (4), whichever is less, relating only to the permitted use or uses conducted in the building or on the immediate premises thereof. Only one (1) free standing sign is permitted per parcel.

16.5.1.2 Free Standing Signs. Any sign supported by structures or supports that are anchored into the ground and that are independent from any building or other structure.

16.5.1.2.1 Size. Maximum of forty (40) square feet in area per face and a maximum of two faces may be used.

16.5.1.2.2 Location and Height. The top of any sign shall not exceed fourteen (14) feet above existing ground level. No sign (except building mounted) shall be placed within ten (10) feet of the roadway right of way or lot lines. All signs or structures must be placed in such a manner that does not obstruct free and clear vision of automobiles or pedestrian traffic. *(Amended March 2016)*

16.5.1.2.3 Lighting. Signs may be illuminated but the lighting shall be confined to the area of the sign and arranged to avoid glare or reflection onto any portion of an adjacent highway, into the path of on-coming vehicles, or onto any residential premises, and shall not significantly contribute to light pollution.

16.5.1.3 Wall Signs. Any sign attached parallel to or painted on an exterior wall of a building, and which projects not more than six inches from such wall.

16.5.1.3.1 Size. The allowable size of the sign is calculated based on 1.5 square feet per lineal foot of building width with a maximum size of eighty square feet.

16.5.1.3.2 Location and Height. The top of any sign shall not exceed sixteen (16) feet above existing ground level. The bottom of any wall sign shall not be less than (3½) feet above existing ground level. *(Amended March 2009)*

16.5.1.4 Canopy Signs. Any sign that is a part of or attached to an awning, canopy, marquee or other protective cover over a door, entrance, window, or outdoor service area.

16.5.1.4.1 Size. The allowable size of the sign is calculated based on 1.5 square feet per lineal foot of building width with a maximum size of eighty square feet.

16.5.1.4.2 Location and Height. The top of any canopy shall not exceed fourteen (14) feet above existing ground level. The bottom of any projecting sign shall not be less than (8) feet above existing ground level.

16.5.1.4.3 Lighting. No internally lit canopy signs shall be permitted.

16.5.1.5 Projecting Signs. Any sign attached to a building in such a manner that its leading edge extends more than six inches from the surface of such building.

16.5.1.5.1 Size. Maximum of eighteen (18) square feet in area per face and a maximum of two faces may be used.

16.5.1.5.2 Location and Height. The top of any projecting sign shall not exceed sixteen (16) feet above existing ground level. The bottom of any projecting sign shall not be less than (8) feet above existing ground level. *(Amended March 2009)*

16.5.1.5.3 Projection. The maximum projection of any sign shall be no more than (6) feet from face of building.

16.5.1.5.4 Lighting. Signs may be illuminated but the lighting shall be confined to the area of the sign and arranged to avoid glare or reflection onto any portion of an adjacent highway, into the path of on-coming vehicles, or onto any residential premises and shall not significantly contribute to light pollution.

16.5.1.6 Multi-tenant Buildings. Each individual tenant may have one (1) additional sign attached to the building with a maximum area of four (4) square feet for the purpose of identifying the type and location of the business or service.

16.5.1.7 Directory Signs. One (1) free standing off-premises directory sign is permitted per parcel if the following criteria can be met:

a. More than four (4) businesses are located on the parcel.

b. The parcel has no frontage on Main Street, NH Route 31, Island Street, or Forest Road.

16.5.2 Prohibited Signs.

a. Roof signs.
b. Neon signs.

16A.0 EXTERNAL LIGHTING

(Adopted March 2003)

16A.1 Purpose and Intent.

The purpose of this ordinance is to preserve the rural atmosphere and dark skies of the Town of Wilton. Natural dark skies are the nighttime aspect of rural character. Increasing light pollution and glare from inappropriate lighting degrades such rural character. This ordinance is intended to enhance public safety and welfare by providing for adequate and appropriate outdoor lighting, providing for lighting that will complement the character of the Town of Wilton, reduce glare, minimize light trespass, reduce the cost and waste of unnecessary energy consumption and prevent the degradation of the night sky.

16A.2 Applicability.

a. In addition to the General Standards found in Section 16A.3 below, detailed lighting requirements shall be set forth in the Town of Wilton Site Plan Review Regulations and shall apply to all outdoor lighting in nonresidential developments in the Town of Wilton requiring site plan approval from the Planning Board, as well as all new and replacement outdoor lighting in nonresidential properties. Home Occupations requiring Planning Board site plan review are required to comply with this Section.
b. Though they are not subject to permitting through this ordinance, residential developers and homeowners are encouraged to use full cutoff energy efficient lighting fixtures and prevent light trespass onto neighboring properties.
c. The Illuminating Engineering Society of North America (IESNA) standards shall apply to those non-residential uses not specifically addressed in this ordinance or by the Site Plan Review Regulations.

16A.3 General Standards.

Non-residential lighting and lights from vehicular traffic associated with a non-residential use shall be shielded or buffered to prevent off-site glare, sky-glow and light trespass. Full cut-off or partial cut-off fixtures, when approved, are to be used, except that low-level lighting (Globe style, non-cut-off types) for walkways and landscape lighting may be approved when an acceptable design meeting the Purpose and Intent (Section 16A.1) of this ordinance is submitted.

Wherever outside lighting is proposed in a site plan review, it shall be accompanied by a formal lighting plan, prepared to scale. The lighting plan shall require Planning Board approval. Home Occupations are exempt from a formal plan but are subject to Site Plan Review Regulations. When any site plan proposes installed street, common or public area outdoor lighting, the final plan shall contain a statement certifying that the applicable provisions of this ordinance and associated regulations shall be adhered to. Lights not required for safety or security shall be turned off within a reasonable time of when a business or activity closes or ceases, as set forth in Site Plan Review Regulations.

This paragraph shall not apply to temporary decorative lighting, which may include colored lamps, such as holiday lighting. Commercial lighting shall meet minimum IESNA illumination levels while not exceeding IESNA uniformity ratios and average illumination recommendations.

17.0 NON-CONFORMING USES AND BUILDINGS

17.1 Non-conforming Buildings, Structures, and Uses.

(Amended March 2007, March 2015)

a. Any non-conforming building, structure, or use of land or buildings may continue in existence.

b. A non-conforming use of a building, structure, or land may not be changed to a different non-conforming use of the same building, structure, or land.

c. A non-conforming use may not be re-established after discontinuance for more than one (1) year.

d. A non-conforming building or structure may be rebuilt on the same footprint and with the same dimensions (including height), unless it has, for more than one (1) year, been unusable for its current purpose by reason of deterioration, destruction, demolition, neglect, accident, condemnation, or any other reason. *(Amended March 2016)*

e. A non-conforming building or structure may not be extended or enlarged.

17.2 Sub-standard Lots of Record.

Where a lot of record at the time of the effective date of this Ordinance has less area and/or frontage than herein required in the District in which it is located:

a. The lot may be used for a single family dwelling if permitted in that district subject to New Hampshire Water Supply and Pollution Control Division approval and subject to all district regulations applicable to lots within the district wherein the lot is located with the exception of lot size and/or frontage.

b. The lot may be used for any non-residential use permitted in the district in which it is located in compliance with maximum density requirements, setbacks, and New Hampshire DES Water Supply and Pollution Control Division regulations.

17.3 Special Exceptions.

(Amended March 2000)

When the dimensions of a lot or the placement of existing structures on a lot are such that there is no reasonable placement of a proposed new structure on that lot which conforms with the lot setback requirements, the Zoning Board of Adjustment may grant a special exception to permit reduced setbacks, provided that:

a. The lot dimensions or existing structures which result in the difficulty must have been in existence prior to the adoption of the setback requirements that are to be reduced.

b. The setback to be reduced must be a lot line setback. Setbacks from wetland or water bodies may not be reduced by a special exception under this section, nor may tower setbacks as specified in the Wireless Communications Overlay District, Section 15.3.5. *(Amended March 2020)*

c. The proposed structure and its proposed placement must be in keeping with the existing development of the neighborhood.

d. The special exception must specifically identify the permitted location of the proposed structure, as shown on a site plan, which is to become part of the record of the decision.

e. The Zoning Board may restrict the dimensions of the proposed structure so as to balance the reasonable use of the property with the spirit of the zoning ordinance.

17.4 ***Status of Variances and Special Exceptions.***

(Amended March 1992)

A building or use permitted by a variance or special exception granted by the Zoning Board of Adjustment shall have the same status as a non-conforming building or use, and shall be subject to the restrictions of this section.

Furthermore, if construction has not begun or the use has not commenced within two (2) years of the granting of the variance or special exception, or March 10, 1992, whichever is later, then the variance or special exception shall expire. All rights conferred by a variance or special exception shall be void upon expiration. Upon application, extensions of time in which to exercise the rights accorded by the variance or special exception may be granted by the Zoning Board of Adjustment for good cause shown beyond the reasonable control or contemplation of the applicant and not prejudicial to the intent and spirit of the Zoning Ordinance. If the variance or special exception is not exercised within the time period provided, then the application shall be deemed withdrawn without prejudice upon the expiration of the time period.

18.0 PHASING OF DEVELOPMENTS

18.1 Indicators of Growth Impact.

The Town of Wilton hereby determines that the presence of any of the following conditions constitutes an indicator of Growth Impact. An Indicator of Growth Impact occurs when:

a. The number of dwelling units for which building permits have been issued (whether for single family or multi-family structures) for either:

   1. The preceding six (6) month period (as measured on June 30 and December 31) equals or exceeds 1.6 percent of the total number of dwelling units existing in the previous calendar year; or

   2. The preceding twelve (12) month period (as measured on June 30 and December 31) equals or exceeds 3.2 percent of the total number of dwelling units existing at the end of the two (2) previous six (6) month periods.

The planning board will collect dwelling unit data twice a year. Data as of December 31 will be collected by March 1 of the succeeding year. Data as of June 30 will be collected by September 1 of the same year. Data collected will consist of the total number of dwelling units in the town's existing housing stock and the number of building permits issued over the previous 6-month period. *(Amended March 2009)*

b. The Wilton and Wilton-Lyndeborough school districts shall notify the Planning Board within 1 month if the number of enrolled students in either the Wilton Elementary School or the Wilton-Lyndeborough Cooperative High School (or other public school erected hereafter) exceeds eighty percent (80%) of stated capacity as defined by the School Board. *(Amended March 2009)*

c. The Planning Board shall determine if the number of dwelling units contained on a proposed subdivision plan or site plan submitted to the Planning Board equals or exceeds 1.3 percent of the then existing dwelling units as measured for the previous calendar year. *(Amended March 2009)*

18.2 Monitoring Growth Indicators.

It shall be the responsibility of the Planning Board to monitor the Indicators of Growth Impact and to make public reports of the presence of one or more of the Indicators.

18.3 Phasing of Subdivision and Cluster Developments.

If the Planning Board finds through its monitoring that either Indicator 18.1 a, b or c has occurred, then the Planning Board may require the phasing of pending and future subdivision and cluster development proposals as provided in New Hampshire RSA 674:21. The purpose of phasing developments is to minimize a strain on municipal resources caused by the sudden introduction of a substantial number of new dwelling units and to allow the Town to plan and absorb the growth over a longer period of time so as to avoid severe impact on Town services and resources.

a. The Planning Board may require phasing of a subdivision or cluster development for a period of up to five (5) years for a project containing up to seventy-five (75) proposed dwelling units or individual lots. For a project exceeding seventy-five (75) dwelling units or individual lots, the Planning Board may negotiate a longer period of time over which phasing of the proposed development is to occur, based on the size of the project and the potential impact of the project on the Town.

b. Once a phasing plan is approved by the Planning Board with dates of allowed construction for each phase, the approved plan shall be recorded with the Hillsborough County Registry of Deeds.

c. The phasing of developments as provided for herein shall remain in effect until the issuance of the next public report as provided in section 18.1, at that time the Planning Board shall determine if the phasing of developments is required in accordance with the provisions of this section.

18.4 ***(Repealed March 2000)***

19.0 ENFORCEMENT AND ADMINISTRATION

19.1 Board of Selectmen.

It shall be the duty of the Board of Selectmen, and the Board is hereby given the power and authority, to enforce the provisions of this Ordinance.

19.2 Building Inspector.

The Building Inspector shall issue any and all building permits requested when such permits are in accordance with the provisions of this Ordinance.

19.3 Permits.

Upon passage of this Ordinance, it shall be unlawful to erect or alter the bulk of any building, place any trailer or manufactured house, or relocate any building in these Districts without first obtaining a building permit from the Building Inspector. *(Amended March 2011)*

19.4 Violations of the Ordinance.

Upon any well-founded information that this Ordinance is being violated, the Selectmen shall take immediate steps to enforce the provisions of this Ordinance by seeking an injunction in the Superior Court or other appropriate legal action.

20.0 BOARD OF ADJUSTMENT

The Board of Selectmen shall appoint five (5) members to a Board of Adjustment members whose duties shall conform to the provisions of Ch. 672-677 N.H. RSA. Thereafter, as terms expire or vacancies occur, the appointing authority shall be responsible for filling vacancies and maintaining full membership on the Board of Adjustment.

21.0 AMENDMENTS

An amendment or amendments to this ordinance may be adopted by a majority vote of any legally constituted Town Meeting when public notices have been given and hearings held in accordance with Ch. 675 NH RSA.

22.0 FINES AND PENALTIES

Civil and criminal enforcement of this ordinance shall be pursuant to Title LXIV, Planning and Zoning, or NH Revised Statutes Annotated (RSAs) as may be amended. *(Amended March 2006)*

23.0 SAVING CLAUSE

If any section of this Ordinance is found to be in conflict with any other section of the Ordinance or with any local, state, or federal regulation, the more stringent standard shall apply. The invalidity, unconstitutionality or illegality of any section or provision of the Ordinance or any Zoning District shown on the zoning map shall not have any effect upon the validity, constitutionality or legality of any other section, provision or Zoning District boundary. *(Amended March 1996)*

24.0 WHEN EFFECTIVE

This Ordinance and amendments as voted, shall take effect upon its passage.

25.0 IMPACT FEES

(Adopted March 2001)

25.1 Purpose.

(Amended March 2011)

This ordinance is enacted pursuant to RSA 674:21, and in order to:

a. Promote the public health, safety, welfare and prosperity;

b. Assist in the implementation of the Master Plan and Capital Improvements Program;

c. Enable the Town of Wilton to assess an equitable share of the cost of public capital facilities to new development in proportion to its demand on those facilities;

d. Provide authority for the Planning Board to adopt proportionate impact fee assessments, and related regulations for administration thereof.

25.2 Definitions.

25.2.1 Impact Fee. A fee or assessment imposed upon development, including subdivision, building construction or other land-use change, in order to help meet the needs occasioned by the development for the construction or improvement of capital facilities owned or operated by the Town of Wilton, including and limited to water treatment and distribution facilities; wastewater treatment and disposal facilities; sanitary sewers; storm water, drainage and flood control facilities; public road systems and rights-of-way; municipal office facilities; public school facilities; the municipality's proportional share of capital facilities of a cooperative or regional school district of which the municipality is a member; public safety facilities; solid waste collection, transfer, recycling, processing and disposal facilities; public libraries; and public recreation facilities, not including open space.

25.2.2 New Development. For the purpose of impact fee assessment, new development may include the following land use changes: *(March 2011)*

a. The construction of any new dwelling unit; or

b. Changes to an existing structure that would result in a net increase in residential living area or the number of dwelling units (*Amended March 2018*); or

c. Construction of a new commercial/industrial building or any net increase in the gross floor area of an existing commercial/industrial building; or

d. The conversion of an existing use to another use that is determined by the Planning Board, to result in a measurable net increase in the demand on the public capital facilities that are the subject of impact fee assessment; however,

e. New development shall not include the replacement of an existing manufactured housing unit or the reconstruction of a structure that has been destroyed by fire or natural disaster where there is no change in size, density, or type of use that would increase the demand on capital facilities for which impact fees are assessed.

25.2.3 Off-Site Improvements. Improvements that are necessitated by a development but which are located outside the boundaries of the property that is subject to a subdivision or site plan approval by the Planning Board, and limited to necessary highway, drainage, and sewer and water upgrades pertinent to that development. *(March 2011)*

25.2.4 School District. The Wilton School District, the Wilton-Lyndeborough School District, or another regional or cooperative school district of which the Town of Wilton becomes a member municipality. *(March 2011)*

25.3 Authority to Assess Impact Fees.

The Planning Board is hereby authorized to assess impact fees, as herein defined, and in accordance with the standards herein set forth. The Planning Board shall have the authority to adopt regulations to implement the provisions of this ordinance. The Impact Fee Schedule is separate from this ordinance and is reviewed and amended as set forth in the Review and Establishment of Fees section below. The Impact Fee Schedule shall be located in Appendix VIII. *(Amended March 2004)*

25.4 Assessment Methodology.

The amount of any impact fee shall be a proportional share of municipal capital improvement costs which is reasonably related to the capital needs created by new development, and to the benefits accruing to new development from the capital improvements financed by the fee. Upgrading of existing facilities and infrastructures, the need for which is not created by new development, shall not be paid for by impact fees. *(Amended March 2011)*

25.5 Administration of Impact Fees.

25.5.0.1 Imposition of Impact Fees.

1. Any person who, after the initial date of adoption of an Impact Fee Schedule, seeks to undertake new development within the Town of Wilton, New Hampshire, by applying for a building permit or permit for manufactured home installation and who is not vested under RSA 674:39, is hereby required to pay impact fees in the manner set forth in this Section.

2. No new building permit or new permit for manufactured home installation or any activity requiring payment of an impact fee pursuant to this Section of this Ordinance shall be issued unless and until the public capital facilities impact fees hereby required have been determined.

3. Impact Fees assessed to new development on lots created as part of a new subdivision of land shall be subject to the Impact Fees set forth in the Impact Fee Schedule in effect at the time and date of subdivision approval and recording at the Hillsborough County Registry of Deeds (HCRD). The fee schedule in effect at the time of the subdivision approval shall remain applicable to development on those lots for a period of time as determined by RSA 674:39, or five years in the event no time is specified in the statute. Subsequent construction on those lots will be subject to the fee schedule in effect at the time a building permit application is received. *(Amended March 2011, March 2018)*

25.5.1 Each impact fee shall be accounted for separately, shall be segregated from the Town's general fund, may be spent upon order of the Board of Selectmen, and shall be used solely for the capital improvements for which it was collected, or to recoup the cost of capital improvements made in anticipation of the needs for which fees are collected to meet.

25.5.2 Impact fees shall be assessed at the time of Planning Board approval of a subdivision or site plan. When no Planning Board approval is required, or has been made prior to the adoption or amendment of the impact fee ordinance or fee schedule, impact fees shall be assessed prior to, or as a condition for, the issuance of a building permit or other appropriate permission to proceed with development. *(Amended March 2011)*

25.5.3 Between the date of assessment and collection, the Planning Board may require developers to post security, in the form of cash bond, letter of credit or performance bond so as to guarantee future payment of assessed impact fees.

25.5.4 Impact fees shall be collected as a condition for the issuance of a Certificate of Occupancy. *(Amended March 2011)*

25.5.5 The Planning Board and the assessed party may establish an alternate, mutually acceptable schedule of payment of impact fees.

25.6 ***Return of Impact Fees.***

25.6.1 If the full impact fee assessed under this Ordinance is not encumbered or otherwise legally bound to be spent for the purpose for which it was collected within six (6) years, the fee shall be refunded to the owner of record of the assessed property, with any accrued interest. *(Amended March 2011)*

25.6.2 Whenever the calculation of the impact fee has been predicated upon some portion of capital improvement costs being borne by the Town or School District, a refund shall be made upon the failure of the Town or School District to appropriate its share of the capital improvement costs within six (6) years from the date of payment thereof. *(Amended March 2011)*

25.7 ***Other Authority Retained.***

25.7.1 This ordinance shall not be deemed to affect the existing authority of the Planning Board over subdivisions and site plans, including, but not limited: *(Amended March 2011)*

a. The authority to declare a development to be premature or scattered in accordance with the regulations of the Board and in accordance with RSA 674:36, II(a); and

b. The authority to impose exactions for off-site improvements necessitated by a development during the subdivision or site plan review process, in accordance with RSA 674:21, V (j).

25.8 ***Review and Establishment of Fees.***

Pursuant to the authority to administer Innovative Land Use Controls under RSA 674:21, II, the Impact Fee Schedule shall be set in accordance with RSA 674:21, V, (a), and shall be reviewed every three years, starting in 2020, and amended by the Planning Board as required. The Planning Board shall schedule a public hearing, after providing proper public notice, for the review of the fee schedules. The Impact Fee Schedule approved shall become effective upon certification by the Town Clerk. *(Adopted March 2004, March 2020.)*

25.9 ***Waiver of Impact Fees***
(Adopted March 2011, March 2020)

The Planning Board may grant full or partial waivers of impact fees to an assessed property, subject to its finding that the proposed development meets one or more of the applicable conditions set forth below:

a. Age-Restricted Housing. In the event that school impact fees are imposed, a full or partial waiver of the school impact fee may be granted for residential units that are lawfully restricted to exclusive occupancy by persons age 62 or older within a development that is maintained in compliance with the provisions of RSA 354-A: 15, Housing For Older Persons. The Planning Board may waive school impact fee assessments on such age-restricted units where it finds that those units will be bound by lawful deeded restrictions for a period of at least 20 years on occupancy by persons age 62 or older.

b. Other Contributions to Capital Facility Improvement. The Planning Board may agree to waive all or part of an impact fee assessment and accept in lieu of a cash payment, a proposed contribution of real property or facility improvements of equivalent value and utility to the public. Prior to acting on a request for a waiver of impact fees under this provision that involves a contribution of real property or the construction of capital facilities, the Planning Board shall submit a copy of the waiver request to the Board of Selectmen for its review and consent prior to its acceptance of the proposed contribution. The value of contributions or improvements shall be credited only toward facilities of like kind, and may not be credited to other categories of impact fee assessment. Full or partial waivers of impact fees may not be based on the value of exactions for off-site improvements.

c. Alternative Calculation. An applicant may apply to the Planning Board for a waiver of a portion or the full amount of the impact fee where such waiver application is accompanied by an independent fee calculation that documents the proportionate capital facility cost attributable to the development. The Planning Board shall review such study and may approve a waiver if it finds that the alternative calculation more accurately accounts for the relevant capital facility costs attributable to the development. All costs incurred by the Town for the review of such a study shall be paid by the applicant.

25.10 ***Appeal of Impact Fee Assessment***
(Adopted March 2011)

a. A party aggrieved by a decision made by the Building Inspector or other Town official relating to an administrative decision in the assessment or collection of impact fees authorized by this Article may appeal such decision to the Zoning Board of Adjustment as provided by RSA 676:5, as amended.

b. A party aggrieved by a decision of the Planning Board under this Article may appeal such decision to the Hillsborough County Superior Court as provided by RSA 677:15, as amended.

CERTIFICATION AND FILING WITH THE TOWN CLERK AND NHOSI

Pursuant to RSA 675:6, 8, and 9

Planning Board Certification – (Signature)

1. _____ Date: _____

2. _____ Date: _____

3. _____ Date: _____

4. _____ Date: _____

5. _____ Date: _____

6. _____ Date: _____

7. _____ Date: _____

Town Clerk Certification – (Signature)

_____ Date: _____

NH Office of Strategic Initiatives

Copy Forwarded

Date: _____

By: _____